SAM HOUSTON AVENUE WATERLINE REPLACEMENT

HUNTSVILLE, WALKER COUNTY, TEXAS

COH No. 12-11-03

NOVEMBER 2016

LEGEND

- Electrical Manhole
- Fire Hydrant
- Gas Manhole
- Gas Meter
- Guy Anchor
- Iron Pipe Found
- Iron Rod Found
- Iron Rod Set
- Light Pole
- Power Pole
- Sewer Clean-Out
- Sewer Manhole
- Sprinkler Head
- Storm Drain Manhole
- Street Sign
- TBM
- Telephone Manhole
- Telephone Pedestal
- Traverse Point
- Water Meter
- Water Valve
- Blackjack Tree
- Cedar Tree
- Elm Tree
- Mesquite
- Pine Tree
- Post Oak
- Water Oak Tree

+95.05 / 309.12 — Station / Top of Curb Elevation

SD1.01 — Proposed Drainage Structure No.

WA1.01 — Indicates Proposed Water Structure Identifier

WS1.01 — Indicates Proposed Water Service Line Number

SE1.01 — Indicates Proposed Sewer Structure Identifier

SS1.01 — Indicates Proposed Sewer Service Line Number

Ambulatory Ramp

Prop. Handicapped Parking Sign

Straw Bale Barrier

Inlet Protection

Prop. Drainage Structure w/Culvert Inlet Protection

14 — Prop. Inlet / Storm Drain

Drainage Flow

℄ Drainage Ditch

Straw Bale — Indicated Drainage Flow w/Straw Bale Barrier

Prop. Hose Bib

P — Pipeline

G — Gas Line

T — Telephone Cable

FO — Fiber Optics Cable

OE — Overhead Electrical Line

UE — Underground Electric Line

UU — Underground Utilities

8S — Ex. Sewer Line w/ size

8S — Prop. Sewer Line w/ size

8W — Ex. Water Line w/ size

8W — Prop. Waterline & Fire Hydrant

SF — Prop. Silt Fence

224 — Ex. Ground Contour Line

224 — Prop. Finish Grade Contour

X — Wire Fence

Chain Link Fence

Pipe Fence w/ Cable

Subdivision Boundary

Prop. R.O.W. Line

Easement Lines

ABBREVIATIONS

BC	BUILDING CORNER	±	PLUS OR MINUS
BM	BENCHMARK	PC	POINT OF CURVATURE
CFS	CUBIC FEET PER SECOND	PRC	POINT OF REVERSE CURVATURE
℄	CENTERLINE	PCC	POINT OF COMPOUND CURVATURE
CMP	CORRUGATED METAL PIPE	⅊	PROPERTY LINE
CONC.	CONCRETE	PROP.	PROPOSED
Δ	DELTA	PT	POINT OF TANGENCY
ø	DIAMETER	P.D.E.	PUBLIC DRAINAGE EASEMENT
DIA	DIAMETER	P.U.E.	PUBLIC UTILITY EASEMENT
DIP	DUCTILE IRON PIPE	PVC	POLYVINYL CHLORIDE
ELEV.	ELEVATION	R	RADIUS
E.O.P.	EDGE OF PAVEMENT	R.O.W.	RIGHT OF WAY
EX.	EXISTING	SD	STORM DRAIN
F.F	FINISHED FLOOR	SF	SQUARE FEET
F.H.	FIRE HYDRANT	SS	SEWER SERVICE
⅊	FLOW LINE	S.Y.	SQUARE YARD
FT.	FOOT (FEET)	STA.	STATION
GALV.	GALVANIZED	STD.	STANDARD
H.P.	HIGH POINT	SW	SIDEWALK
HGL	HYDRAULIC GRADE LINE	TBM.	TEMPORARY BENCHMARK
IN.	INCH	TC	TOP OF CURB
L.F.	LINEAR FEET	TG	TOP OF GRATE
L.P.	LOW POINT	TI	TOP OF INLET
MH	MANHOLE	TMH	TOP OF MANHOLE
MIN.	MINIMUM	TP	TOP OF PAVEMENT
MISC.	MISCELLANEOUS	TS	TOP OF SIDEWALK
NG	NATURAL GROUND	TEL.	TELEPHONE
N.T.S.	NOT TO SCALE	VPC	VERTICAL POINT OF CURVATURE
OC	ON CENTER	VPI	VERTICAL POINT OF INTERSECTION
OCEW	ON CENTER EACH WAY	VPT	VERTICAL POINT OF TANGENCY
O.D.	OUTSIDE DIAMETER	WS	WATER SERVICE

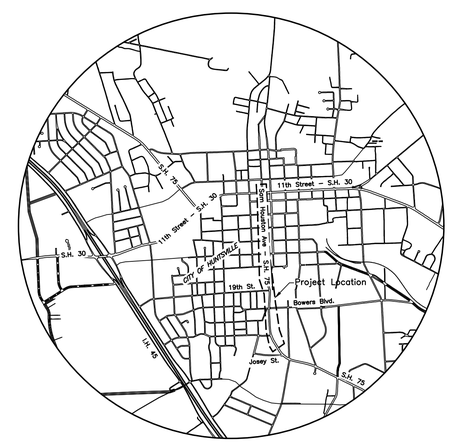

VICINITY MAP

Sheet List Table

Sheet Number	Sheet Title
C0.0	Cover Sheet & Index
C1.1	Overall Project Layout
C2.1	Initial Erosion Control Plan
C3.1	Sam Houston Ave Station 100+00 to 110+00
C3.2	Sam Houston Ave Station 110+00 to 121+00
C3.3	Sam Houston Ave, Station 121+00 to 132+00
C3.4	Sam Houston Ave, Station 132+00 to 143+00
C3.5	Sam Houston Ave, Station 143+00 to 155+00
C4.1	Construction Standard Details
C4.2	Traffic Control Plan
C4.3	Traffic Control Details
C4.4	Traffic Control Details

Owner:
City of Huntsville
448 State Highway 75 N
Huntsville, Texas 77340

Prepared By:
McClure & Browne
Engineering/Surveying, Inc.
1008 Woodcreek Drive, Suite 103
College Station, Texas 77845
(979) 693-3838

City Officials:

Mayor	Andy Brauninger
Mayor Pro Tem	Keith D. Olson
Council Members	Joe Emmett
	Tish Humphrey
	Ronald Allen
	Joe Rodriguez
	Lydia Montgomery
	Don H. Johnson
City Manager	Matt Benoit
City Engineer	Y. S. Ramachandra, P.E.
Director of Development Services	Aron Kulhavy

STATE OF TEXAS — 01/09/17 — 2016 — CHRISTOPHER P. FREIRICH — 119266 — LICENSED PROFESSIONAL ENGINEER

ISSUED FOR BIDDING AND CONSTRUCTION.

DATE: 11/09/2016
DRAWN BY: CPF
DESIGNED BY: CPF
CHECKED BY: JDB

REVISIONS

McCLURE & BROWNE ENGINEERING/SURVEYING, INC.
Engineer Reg. No. F-458 Survey Reg. No. 10103300
1008 Woodcreek Dr., Suite 103
College Station, Tx. 77845 (979) 693-3838
M&B MBESI No. 10250020

COH NO. 12-11-03

Cover Sheet & Index

SAM HOUSTON AVENUE WATERLINE REPLACEMENT

SHEET NO.

C0.0

10250022-002-C0
100% COMPLETE

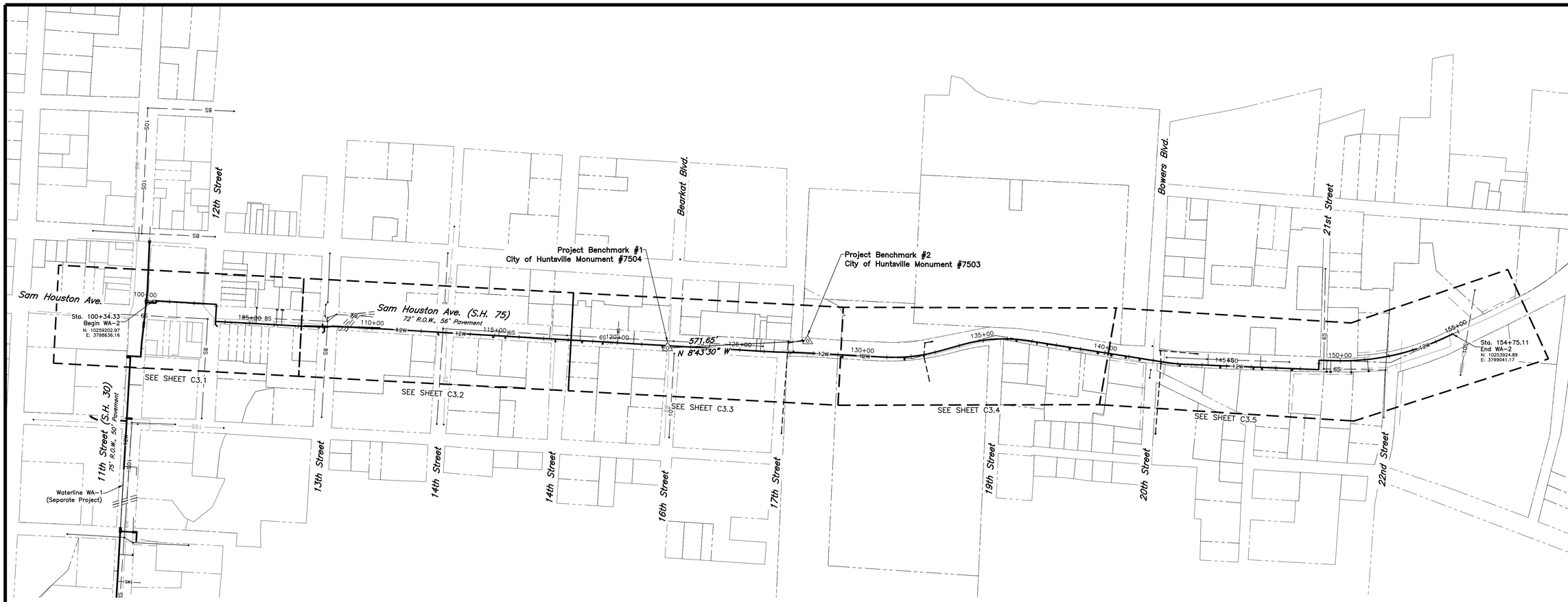

OVERALL PLAN – WATERLINE WA-2

SCALE: Hor: 1" = 200'

0 100' 200' 400'

Project Benchmark Information:

#1: City of Huntsville Monument #7503
Iron Nail in Pavement
Northing: 10256535.283
Easting: 3798745.179
Elevation: 407.548

#2: City of Huntsville Monument #7504
Iron Nail in Pavement
Northing: 10257100.315
Easting: 3798658.465
Elevation: 387.413

GENERAL CONSTRUCTION NOTES:

1. It shall be the responsibility of the Contractor to verify the exact location of all underground utilities. At least 48 hours prior to beginning construction, the Contractor shall contact the following, but not limited to:
   A. Texas811 811
   B. City of Huntsville Water & Sewer Department 1–936–294–5762
   C. CenterPoint Energy/Entex, Inc. 1–936–295–8767
   D. Sam Houston State University Facilities Management 1–936–294–3152
2. All construction shall be in accordance with Construction Drawings and Technical Specifications found herein. All testing shall be performed in accordance with the Technical Specifications.
3. The Contractor is responsible for all construction safety. Construction Drawings do not contain necessary components for construction safety.
4. In lieu of using the construction materials indicated in these plans, the Contractor shall obtain written approval from the Engineer for any substitution.
5. It is the responsibility of the Contractor to comply with all State and Federal Regulations regarding construction activities near energized overhead power lines.
6. Location of existing buried utilities, where shown, is approximate only. Other utilities may be present that are not shown on the Construction Drawings. The Contractor shall be responsible for locating and protecting all buried utilities.
7. All materials and labor not identified as a Separate Bid Item shall be considered subsidiary to the item in which it is used.
8. All dimensions are marked from back of curb, unless otherwise noted.
9. Adjustment of water meters, valves, manholes, irrigation systems, and any other public or private utility are not separate pay items. The price of the adjustment shall be subsidiary to the project.
10. All materials removed from the site shall be disposed of in accordance with local, state, and federal regulations.
11. All coordinates given are local coordinates. Published City of Huntsville Control Monument coordinates may vary slightly from those shown herein.
12. Water Service Installation: The near side services may be installed by open cut method. Far side services (i.e. services going under pavement) shall be installed by pneumatic piercing tool, directional bore or similar method approved by the Engineer.
13. Any private property (i.e. fence, driveway, mailboxes, etc.) damaged by the contractor shall be repaired to existing or better conditions to the satisfaction of the owner, city, and engineer. The cost of protection and repairs shall be subsidiary to the waterline improvements.

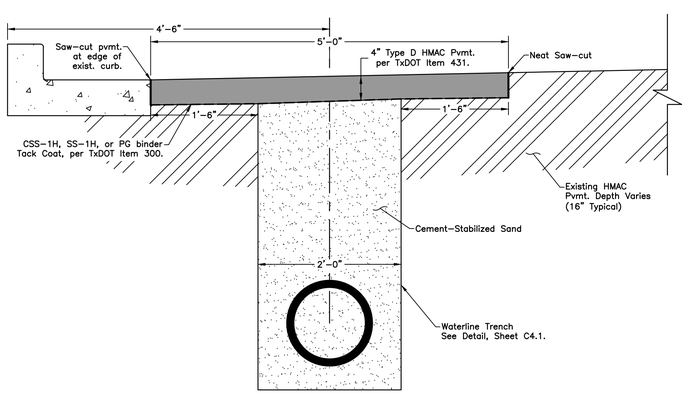

Typical Waterline Section in TxDOT ROW

STATE OF TEXAS
7/1/99 – 2/01/16
CHRISTOPHER P. FREIRICH
119266
LICENSED
PROFESSIONAL ENGINEER

ISSUED FOR BIDDING AND CONSTRUCTION.

DATE: 11/09/2016
DRAWN BY: CPF
DESIGNED BY: CPF
CHECKED BY: JDB

REVISIONS

McCLURE & BROWNE ENGINEERING/SURVEYING, INC.
Engineer Reg. No. F-458 Survey Reg. No. 10103300
1008 Woodcreek Dr. Suite 103
College Station, Tx. 77845 (979) 693-3838
M&B
MBESI No. 10250020

CGH NO. 12-11-03

Overall Project Layout

Sam Houston Avenue Waterline Replacement

SHEET NO.

C1.1

10250020-002-c1

100% COMPLETE

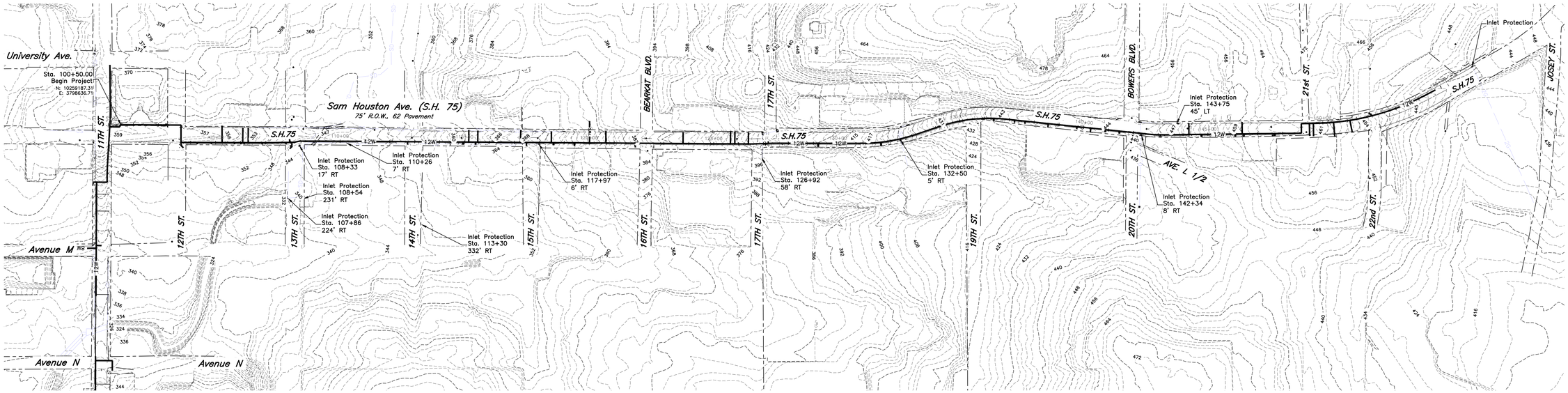

Erosion Control Plan

SCALE: Hor: 1" = 200'

0 100' 200' 400'

EROSION CONTROL NOTES

1. It is the responsibility of the Contractor to prepare and maintain a Storm Water Pollution Prevention Plan in accordance with the current TCEQ/EPA requirements for storm water discharges associated with construction activity under General Permit, USACE 33 CFR, & Section 404 of the Clean Water Act, & Texas Pollutant Discharge Elimination System (TPDES) General Permit No. TXR150000 as administered by the Texas Commission on Environmental Quality (TCEQ).
2. The Contractor shall not allow sediment to leave the work area or enter any adjoining channels. Additional measures to those shown on this plan and described in these notes may be required to prevent sediment from leaving the work area. The Contractor shall be responsible for clean-up and restoration to original condition, including establishment or re-vegetation of any lands or channels affected should construction sediment be found outside of limits of construction work.
3. **All disturbed areas are to have establishment of grass as outlined below. Contractor is responsible for watering, maintenance and establishment of grass for a period of 90 days beyond project acceptance. Contractor to guarantee all planted material growth and coverage for a period of 6 months. Growth and coverage shall be defined as 100% of the planted area with uniform coverage of grass greater than 1" in height with no bare spots greater than 2 square feet. A Second application of fibermulch is required for bare spots not meeting coverage requirement within 60 days of initial application. Areas adjacent to the building to receive block sodding or hydromulch seeding are not included in this requirement. Refer to landscape plans for location of plantings.**
4. Contractor is to maintain erosion control throughout duration of the project such that all work areas are to plan grades once vegetation is established. Insure sediment is not transported downstream from project via hay bales or silt fence installation. If erosion is observed in the field, additional erosion controls shall be installed.
5. Silt fencing is to be installed per detail. In lieu of silt fencing, Contractor may use straw bale barriers or continuous extruded fabric berm filled with 3/4" gravel upon approval of the Engineer. Sediment to be cleaned from silt fencing or other sediment control devices when depth of sediment reaches ±1/3 total height of device. Contractor is to insure erosion control devices are consistently installed and properly maintained.

NOI & NOT INFORMATION:

1. SITE DESCRIPTION
   This project is located along Sam Houston Ave./Highway 75 (SH75) from 11th St. to Josey St. The project will disturb approximately 0.64 acres. The midpoint of the project is located at Latitude 30.716572° and Longitude −95.551431°. The project consists of the replacement of approximately 5,462 LF of waterline and associated pavement repairs. The only source of pollution is the erosion of exposed soil. Storm water from the sites flow to storm drains and thence to Town Branch and Tributary A of Town Branch, and thence to Parker Creek (Segment ID 0803D). The Contractor is responsible for containing all sediment on-site by utilizing siltation control devices, washdown areas, or seeding and sodding applications. It is the responsibility of the Contractor to utilize whatever techniques necessary to prevent erosion from this construction site.

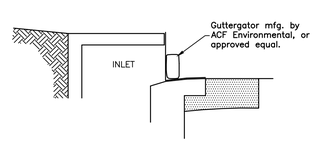

NOTES:

1. The Guttergator shall be installed in accordance with the manufacturer's recommendations.
2. The Guttergator shall span the entire opening of the curb inlet. For inlet openings greater than 12', multiple Guttergators shall be used.

CURB INLET PROTECTION

SCALE: N.T.S.

STATE OF TEXAS
11/09/2016
CHRISTOPHER P. FRERICH
119266
LICENSED
PROFESSIONAL ENGINEER

ISSUED FOR BIDDING AND CONSTRUCTION.

DATE: 11/09/2016
DRAWN BY: CPF
DESIGNED BY: CPF
CHECKED BY: JDB

REVISIONS

McCLURE & BROWNE ENGINEERING/SURVEYING, INC.
Engineer Reg. No. F-458 Survey Reg. No. 10103340
1008 Woodcreek Dr. Suite 103
College Station, Tx. 77845 (979) 693-3838

M&B MBES/ No. 10250020

CCH NO. 12-11-03

Initial Erosion Control Plan

Sam Houston Avenue Waterline Replacement

SHEET NO.

C2.1

10250023-002-C2.1

100% COMPLETE

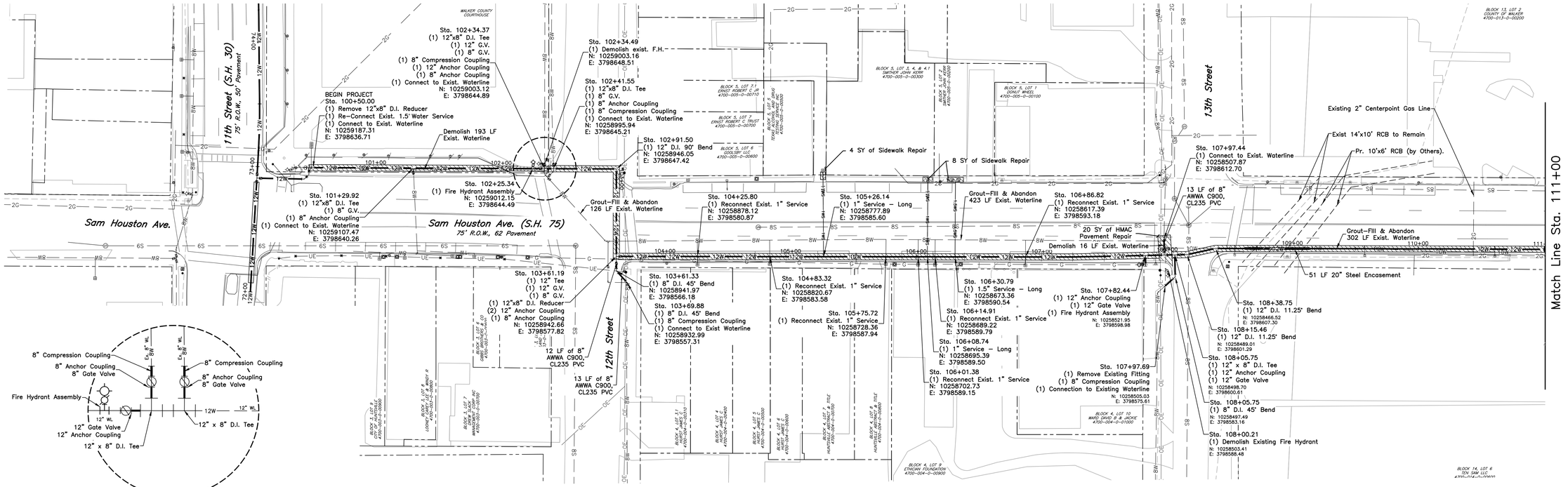

Sam Houston Ave – Waterline WA-2

SCALE: Hor: 1" = 40'
Vert: 1" = 4'

LEGEND:
- HMAC Pvmt. Repair
- Sidewalk Pvmt. Repair
- Directional Bore

PIPE MATERIAL	1050 LF 12" AWWA C900, CL235 PVC Open Cut		PIPE MATERIAL
PAVEMENT REPAIR	85 SY HMAC Pavement Repair	16 SY Sidewalk Repair	581 SY HMAC Pavement Repair	PAVEMENT REPAIR
STRUCTURAL FILL	1050 LF Structural Fill		STRUCTURAL FILL

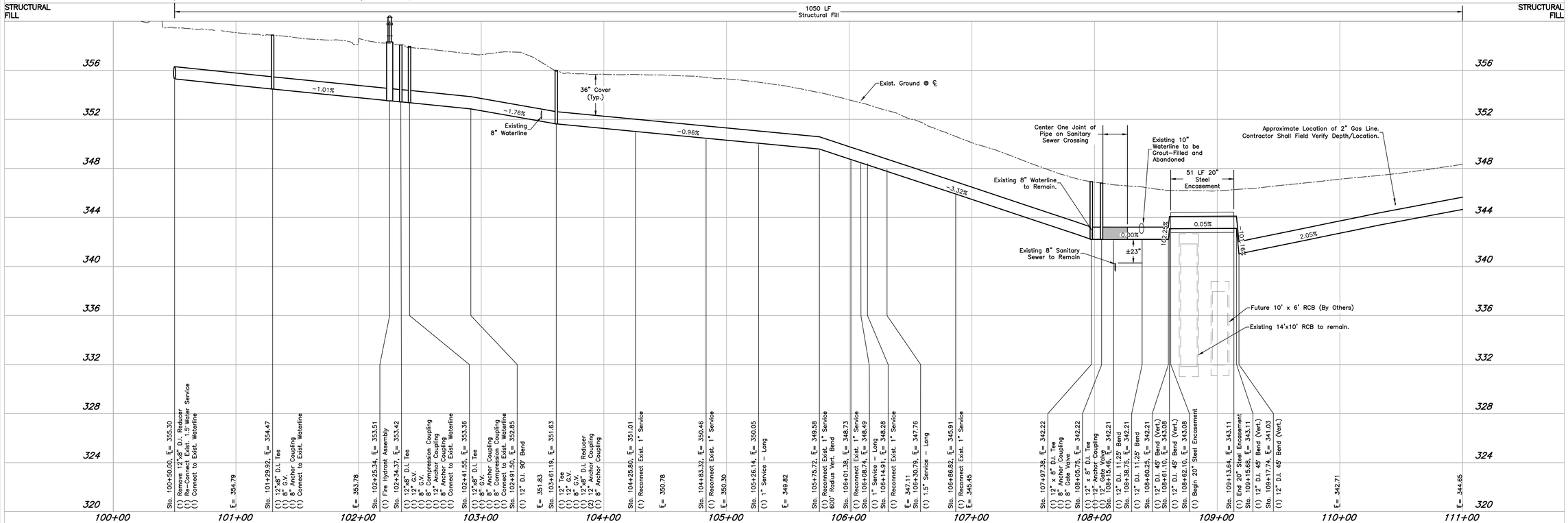

STATE OF TEXAS
11/09/2016
CHRISTOPHER P. FRENCH
119266
LICENSED PROFESSIONAL ENGINEER

ISSUED FOR BIDDING AND CONSTRUCTION.

DATE: 11/09/2016
DRAWN BY: CPF
DESIGNED BY: CPF
CHECKED BY: JDB

REVISIONS

McCLURE & BROWNE ENGINEERING/SURVEYING, INC.
Engineer Reg. No. F-458 Survey Reg. No. 10103-00
1008 Woodcreek Dr. Suite 103
College Station, Tx. 77845 (979) 693-3838

M&B MBES/ No. 10250020

COH NO. 12-11-03

Sam Houston Ave Plan & Profile

Sam Houston Avenue Waterline Replacement

SHEET NO.

C3.1

10250022-002-G3
100% COMPLETE

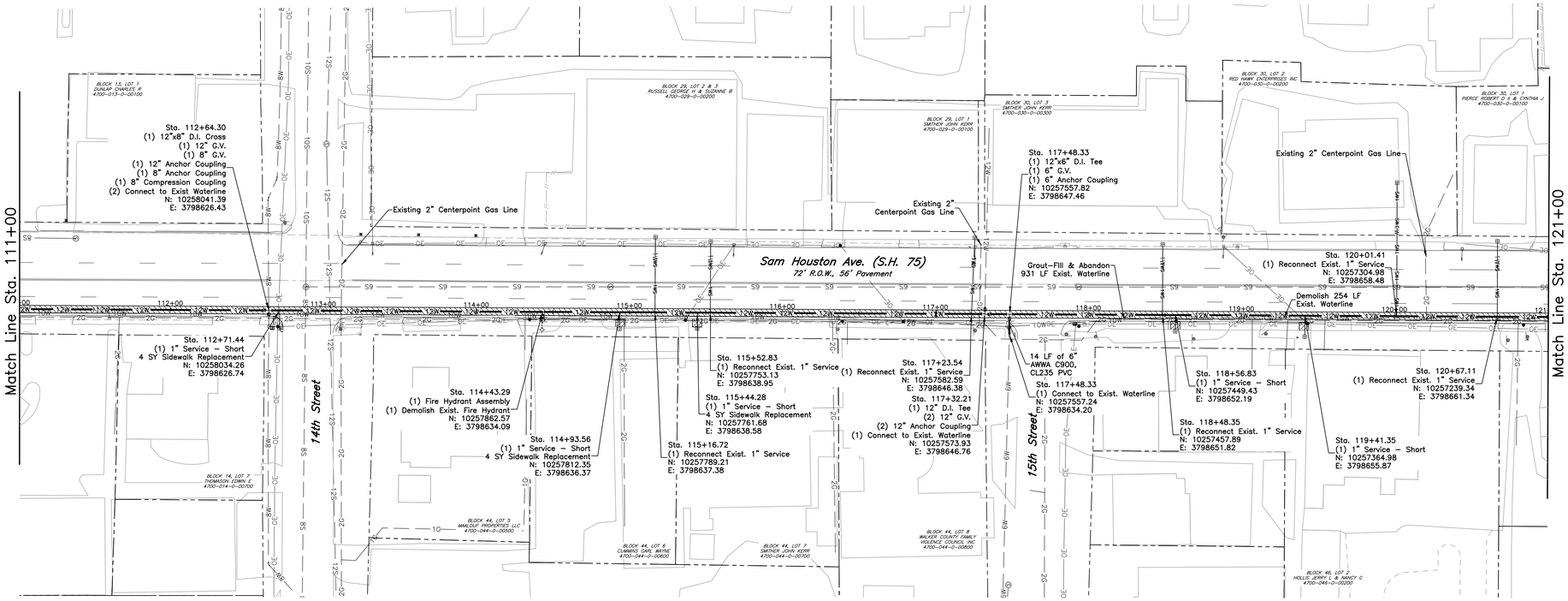

Sam Houston Ave – Waterline WA-2

SCALE: Hor: 1" = 40'
Vert: 1" = 4'
0 20' 40' 80'

LEGEND:
- HMAC Pvmt. Repair
- Sidewalk Pvmt. Repair
- Directional Bore

PIPE MATERIAL	600 LF 12" AWWA C900, CL235 PVC Open Cut	400 LF 12" AWWA C900, CL235 PVC Open Cut
PAVEMENT REPAIR	327 SY HMAC Pavement Repair	220 SY HMAC Pavement Repair
STRUCTURAL FILL	600 LF Structural Fill	400 LF Structural Fill

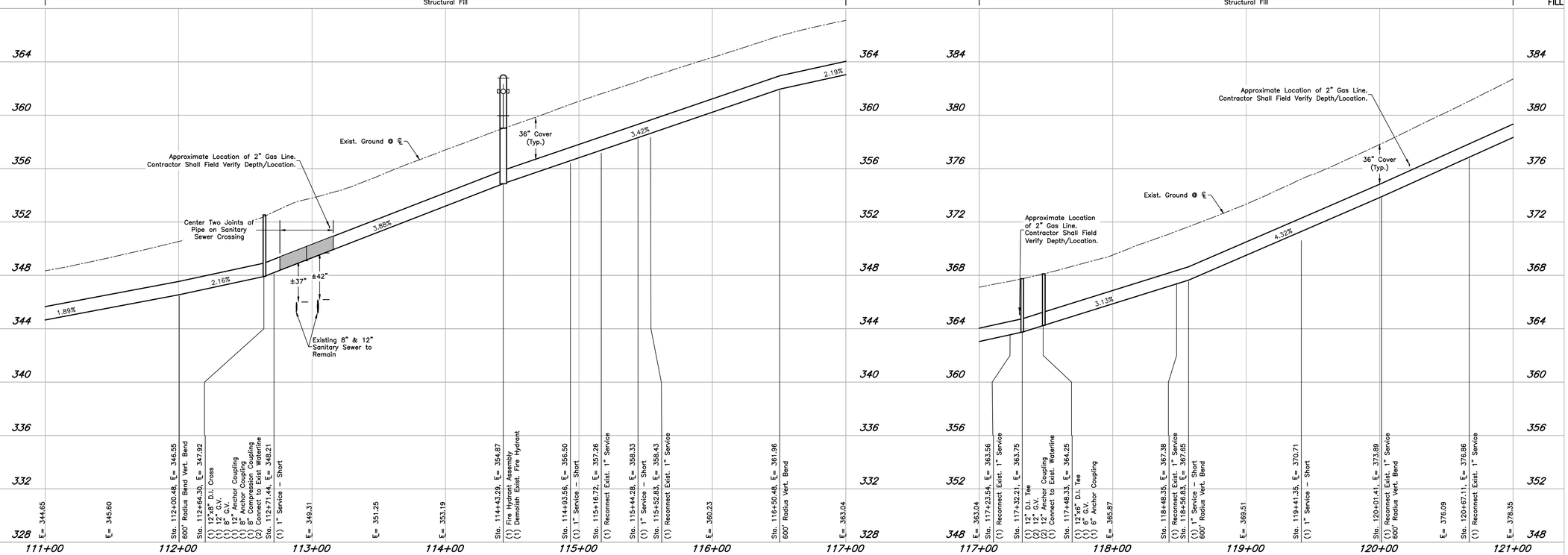

STATE OF TEXAS
117189
CHRISTOPHER P. FREIRICH
119266
LICENSED
PROFESSIONAL ENGINEER

ISSUED FOR BIDDING AND CONSTRUCTION.

DATE: 11/09/2016
DRAWN BY: CPF
DESIGNED BY: CPF
CHECKED BY: JDB

REVISIONS

McCLURE & BROWNE ENGINEERING/SURVEYING, INC.
Engineer Reg. No. F-458 Survey Reg. No. 10103300
1008 Woodcreek Dr. Suite 103
College Station, Tx. 77845 (979) 693-3838

MBESI No. 10250020

CCH NO. 12-11-03

Sam Houston Ave Plan & Profile

Sam Houston Avenue Waterline Replacement

SHEET NO.

C3.2

10250020-002-03
100% COMPLETE

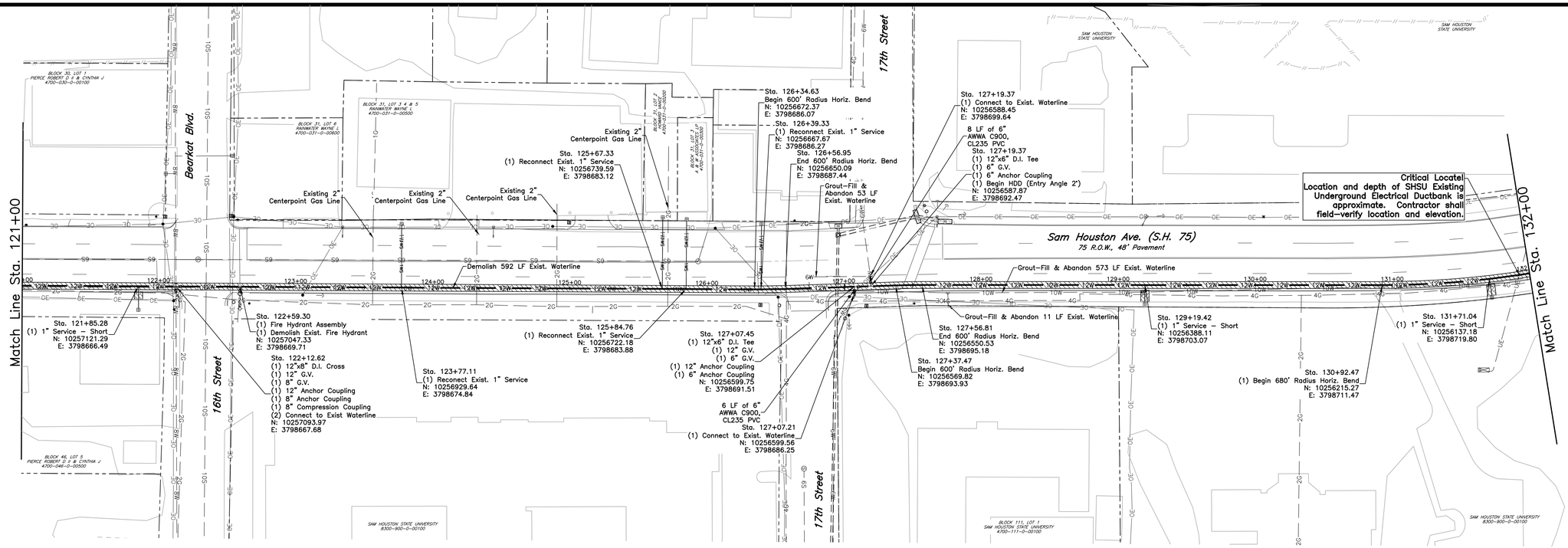

Sam Houston Ave – Waterline WA-2

SCALE: Hor: 1" = 40'
Vert: 1" = 4'
0 20' 40' 80'

LEGEND:
- HMAC Pvmt. Repair
- Sidewalk Pvmt. Repair
- Directional Bore

PIPE MATERIAL	600 LF 12" AWWA C900, CL235 PVC Open Cut	500 LF 12" AWWA C900, CL235 PVC Open Cut
PAVEMENT REPAIR	332 SY HMAC Pavement Repair	278 SY HMAC Pavement Repair
STRUCTURAL FILL	600 LF Structural Fill	500 LF Structural Fill

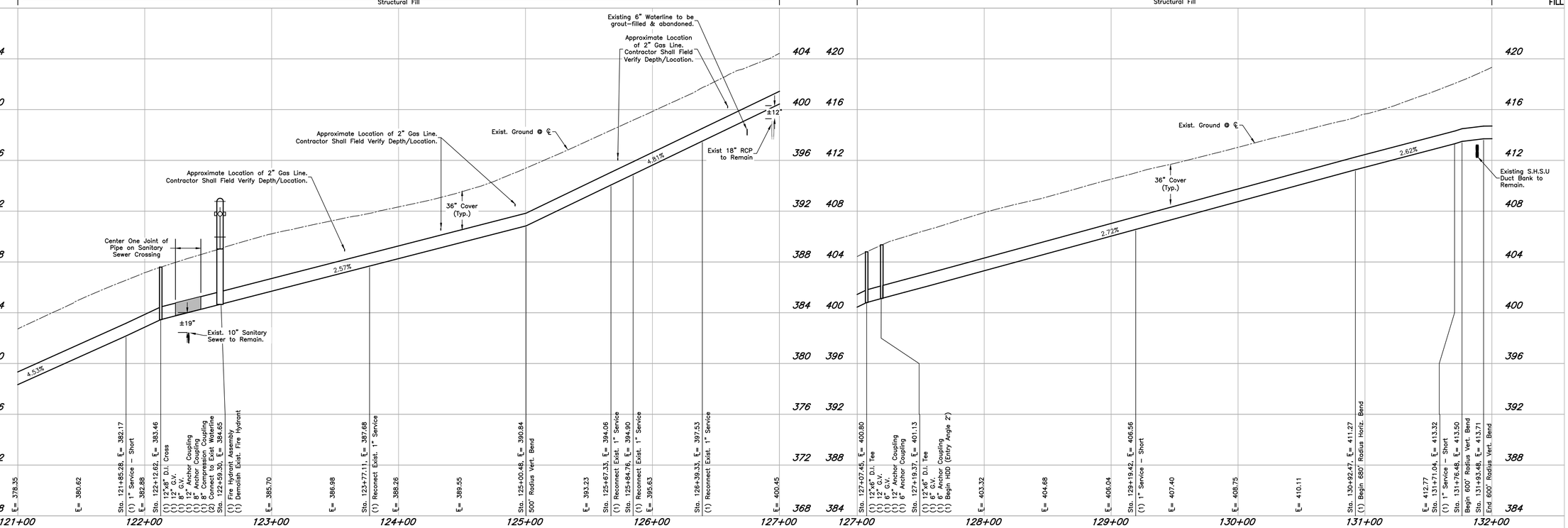

STATE OF TEXAS
07/17/97 – 2016
CHRISTOPHER P. FRERICH
119266
LICENSED PROFESSIONAL ENGINEER

ISSUED FOR BIDDING AND CONSTRUCTION.

DATE:	11/09/2016
DRAWN BY:	CPF
DESIGNED BY:	CPF
CHECKED BY:	JDB

REVISIONS

McCLURE & BROWNE ENGINEERING/SURVEYING, INC.
Engineer Reg. No. F-458 Survey Reg. No. 10103300
1008 Woodcreek Dr. Suite 103
College Station, Tx. 77845 (979) 693-3838
M&B
MBES/ No. 10250020

COH NO. 12-11-03

Sam Houston Ave Plan & Profile

Sam Houston Avenue Waterline Replacement

SHEET NO.

C3.3

10250020-002-03
100% COMPLETE

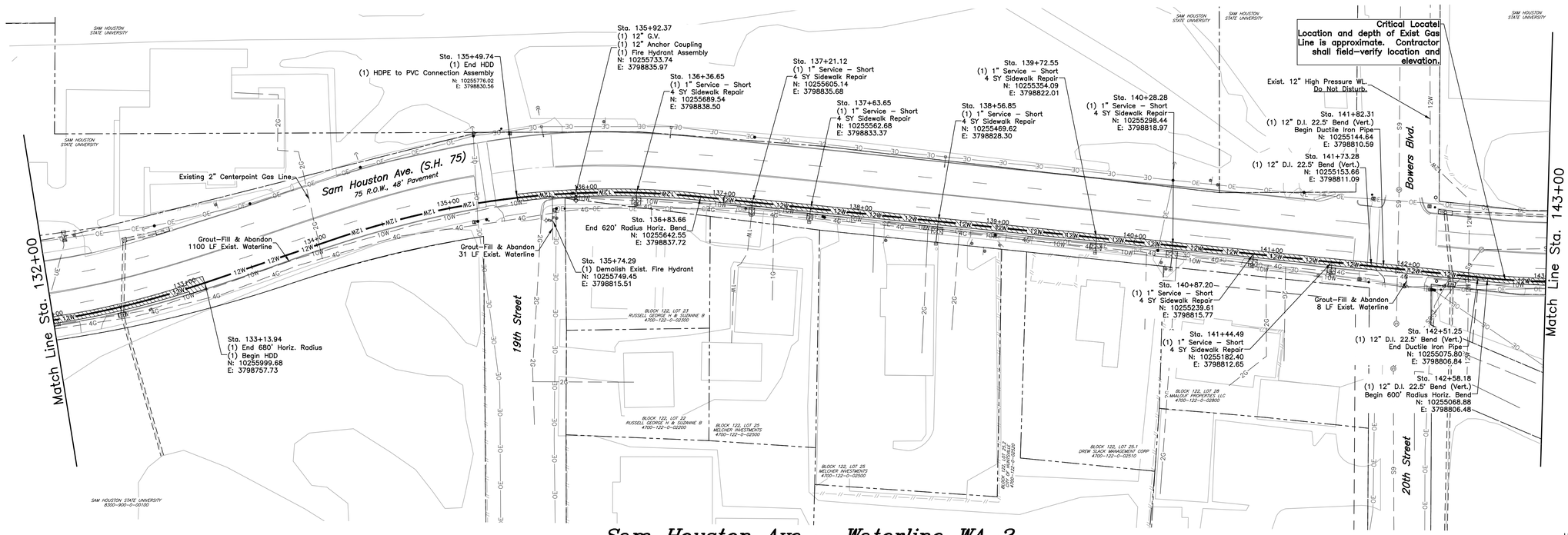

Sam Houston Ave – Waterline WA-2

SCALE: Hor: 1" = 40'
Vert: 1" = 4'
0 20' 40' 80'

LEGEND:
- HMAC Pvmt. Repair
- Sidewalk Pvmt. Repair
- Directional Bore

PIPE MATERIAL	113 LF 12" AWWA C900, CL235 PVC Open Cut	236 LF 12" AWWA C900, CL235 PVC Directional Bore	151 LF 12" AWWA C900, CL235 PVC Open Cut	482 LF 12" AWWA C900, CL235 PVC Open Cut	69 LF 12" AWWA C150, CL235 D.I., Open Cut
PAVEMENT REPAIR	63 SY HMAC Pavement Repair		112 SY HMAC Pavement Repair	333 SY HMAC Pavement Repair	49 LF 12" AWWA C900, CL235 PVC Open Cut
STRUCTURAL FILL	113 LF Structural Fill		151 LF Structural Fill	600 LF Structural Fill	

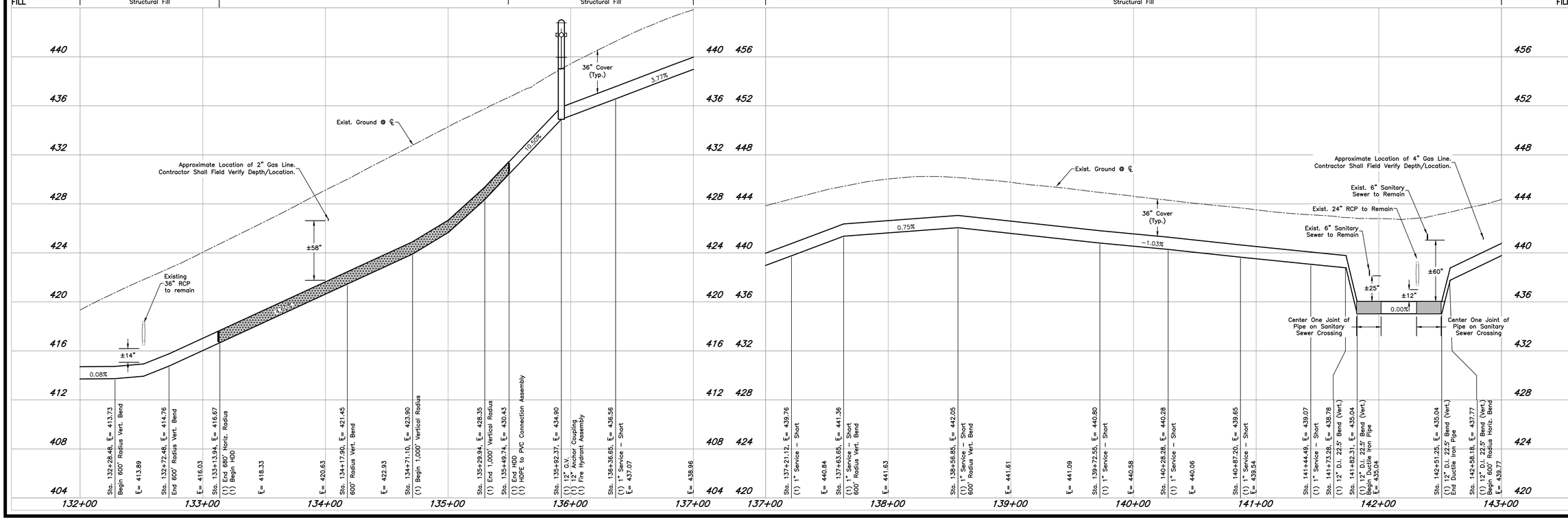

STATE OF TEXAS
117,192 20163
CHRISTOPHER P. FREIRICH
LICENSED
PROFESSIONAL ENGINEER

ISSUED FOR BIDDING AND CONSTRUCTION.

DATE: 11/09/2016
DRAWN BY: CPF
DESIGNED BY: CPF
CHECKED BY: JDB

REVISIONS

McCLURE & BROWNE ENGINEERING/SURVEYING, INC.
Engineer Reg. No. F-458 Survey Reg. No. 10103340
1008 Woodcreek Dr. Suite 103
College Station, Tx. 77845 (979) 693-3838

M&B MBES/ No. 10250020

COH NO. 12-11-03

Sam Houston Ave Plan & Profile

Sam Houston Avenue Waterline Replacement

SHEET NO.
C3.4

10250020-002-03
100% COMPLETE

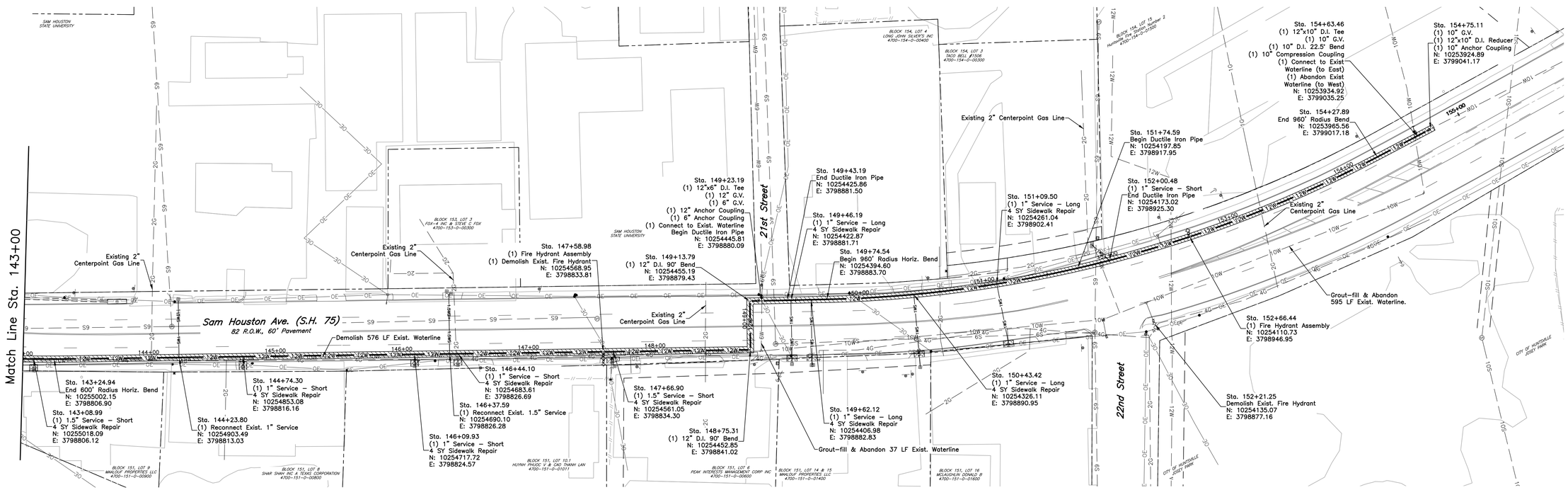

Sam Houston Ave – Waterline WA-2

SCALE: Hor: 1" = 40'
Vert: 1" = 4'
0 20' 40' 80'

LEGEND:
- HMAC Pvmt. Repair
- Sidewalk Pvmt. Repair
- Directional Bore

PIPE MATERIAL	619 LF 12" AWWA C900, CL235 PVC, Open Cut	235 LF 12" AWWA C900, CL235 PVC, Open Cut; 272 LF 12" AWWA C900, CL235 PVC, Open Cut
PAVEMENT REPAIR	654 SY HMAC Pavement Repair	20 LF 12" AWWA C150, CL235 D.I., Open Cut; 26 LF 12" AWWA C150, CL235 D.I., Open Cut
STRUCTURAL FILL	1172 LF Structural Fill	

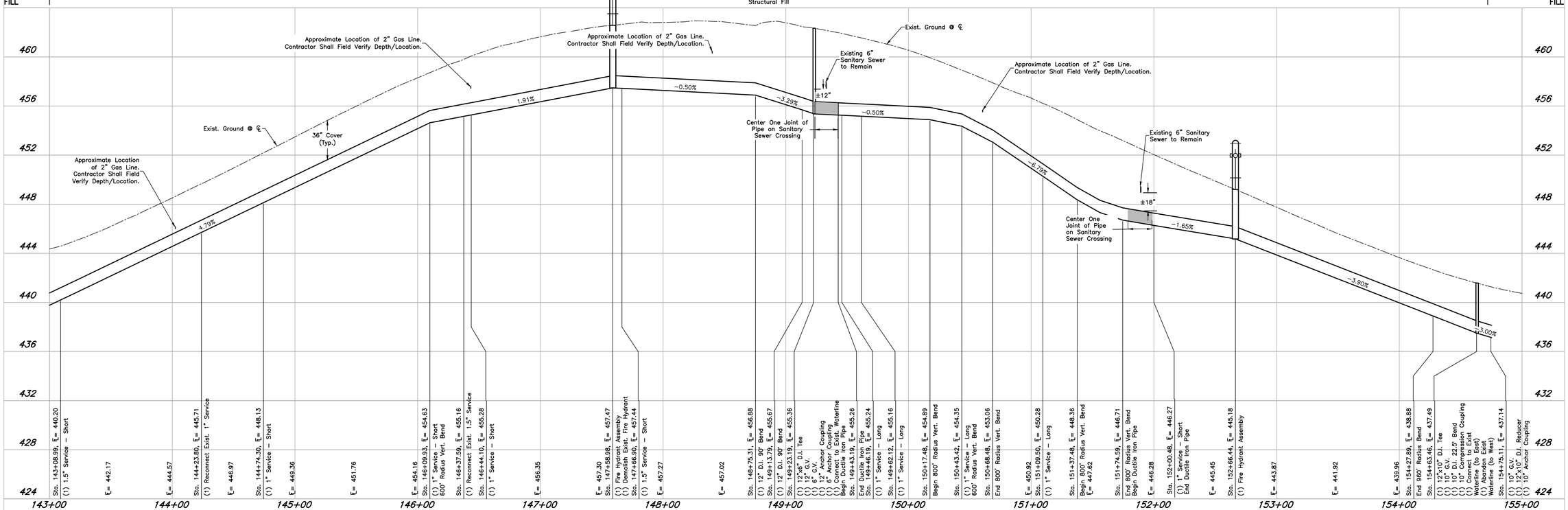

STATE OF TEXAS
07/18/2016
CHRISTOPHER R. FRERICH
LICENSED
PROFESSIONAL ENGINEER
ISSUED FOR BIDDING AND CONSTRUCTION.

DATE:	11/09/2016
DRAWN BY:	CPF
DESIGNED BY:	CPF
CHECKED BY:	JDB

REVISIONS

CDH NO. 12-11-03

McCLURE & BROWNE ENGINEERING/SURVEYING, INC.
Engineer Reg. No. F-458 Survey Reg. No. 10103340
1008 Woodcreek Dr. Suite 103
College Station, Tx. 77845 (979) 693-3838
M&B
MBESI No. 10250020

Sam Houston Ave Plan & Profile

Sam Houston Avenue Waterline Replacement

SHEET NO.

C3.5

10250020-002-03
100% COMPLETE

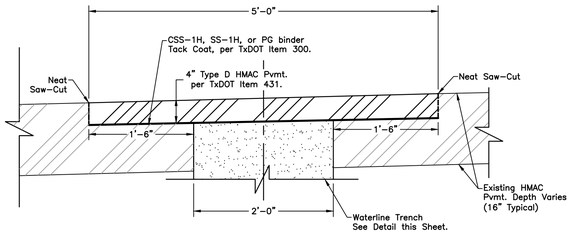

HMAC Pvmt. Repair Detail

N.T.S.

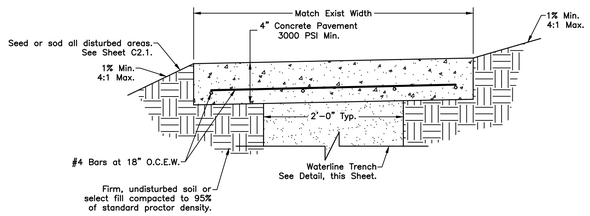

NOTES:
1. Provide expansion joints along waterline trench which align with all expansion joints for adjoining pavement. See detail, this sheet.
2. All rebar shall have 1 ½" cover.
3. All rebar shall be grade 60.
4. All exposed edges shall have ¾" chamfer.

SIDEWALK REPAIR DETAIL

N.T.S.

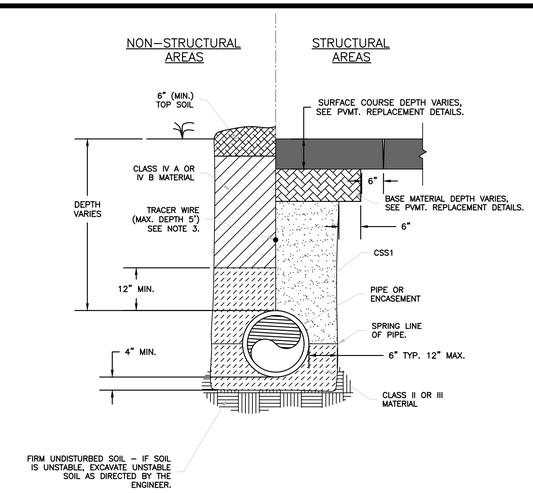

NOTES:
1. MATERIAL CLASSES SHALL BE IN ACCORDANCE WITH ASTM D2321.
2. SEE "COMPACTION AND TESTING REQUIREMENTS FOR BACKFILL MATERIALS" TABLE THIS PAGE.
3. IF PIPE MATERIAL IS NON-METALIC, CONTRACTOR SHALL INSTALL TRACER WIRE. SEE TECHNICAL SPECIFICATIONS FOR TRACER WIRE REQUIREMENTS.

TYPICAL TRENCH DETAIL FOR WATER OR SEWER LINES (PVC, DIP, OR TYPE K COPPER)

N.T.S.

COMPACTION AND TESTING REQUIREMENTS FOR BACKFILL MATERIALS

CLASS OF MATERIAL AS PER ASTM D2321	GENERAL DESCRIPTION OF MATERIALS	REQUIRED COMPACTION	
		NON-STRUCTURAL AREA	STRUCTURAL AREA
IV A OR IV B	SILTS, SILTY CLAY, AND CLAYS, INCLUDING INORGANIC CLAYS AND SILTS OF MEDIUM TO HIGH PLASTICITY AND LIQUID LIMITS. SOIL TYPES MH, ML, CH AND CL ARE INCLUDED IN THIS CLASS	90% OF STD. PROCTOR (ASTM D698) @ 0 TO 4% ABOVE OPT. MOISTURE.	95% OF STD. PROCTOR (ASTM D698) @ 0 TO 4% ABOVE OPT. MOISTURE.
II III	COARSE SANDS AND GRAVELS, INCLUDES VARIOUSLY GRADED SANDS AND GRAVELS CONTAINING SMALL PERCENTAGES OF FINES. SOIL TYPE GW, GP, SW AND SP ARE INCLUDED IN THIS CLASS. FINE SAND AND CLAYEY GRAVELS, INCLUDES FINE SANDS, SAND-CLAY MIXTURES, AND GRAVEL-CLAY MIXTURES. SOIL TYPE GM, GC, SM, AND SC ARE INCLUDED IN THIS CLASS.	95% OF STD. PROCTOR (ASTM D698) @ 0 TO 4% ABOVE OPT. MOISTURE.	95% OF STD. PROCTOR (ASTM D698) @ 0 TO 4% ABOVE OPT. MOISTURE.
SELECT MATERIAL	FREE FLOWING MATERIAL WITH NO LUMPS OR OTHER PARTICLES LARGER THAN 1/2" DIAMETER WITH A PLASTICITY INDEX OF LESS THAN 15, AND IS RELATIVELY DRY, FREE FROM FROST OR ORGANIC DEBRIS, AND NON-CORROSIVE. INCLUDES GRAVELS, SANDS, TRENCH TAILINGS, OR SIMILAR	95% OF STD. PROCTOR (ASTM D698) @ 0 TO 4% ABOVE OPT. MOISTURE.	95% OF STD. PROCTOR (ASTM D698) @ 0 TO 4% ABOVE OPT. MOISTURE.
CEMENT STABILIZED SAND	SEE SPECIFICATIONS.	SEE SPECIFICATIONS.	SEE SPECIFICATIONS.
TESTING REQUIREMENTS		ONE TEST PER 200' OF TRENCH PER 2' OF FILL.	

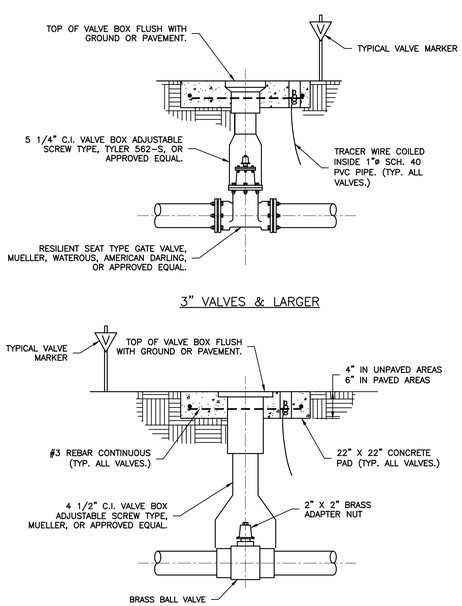

GATE VALVES

N.T.S.

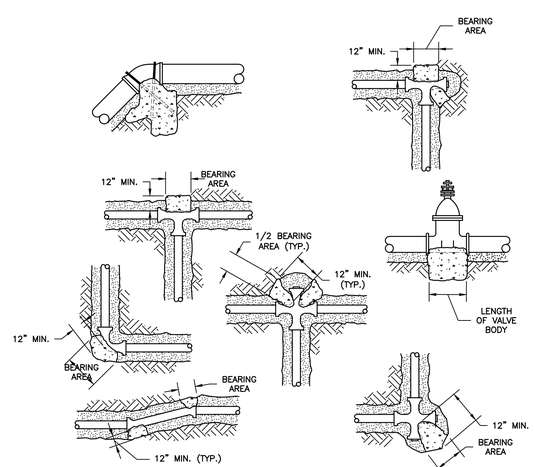

PIPE	MINIMUM BEARING AREA (SF)				
	BEND				DEAD END
	11-1/4°	22-1/2°	45°	90°	
4"	0.5	1.0	1.0	3.0	2.0
6"	1.0	2.0	3.0	6.0	4.0
8"	1.5	3.0	5.0	10.0	7.0
10"	2.0	4.0	8.0	16.0	11.0
12"	3.0	6.0	12.0	22.0	15.0
14"	5.0	8.0	16.0	30.0	21.0
18"	6.5	13.0	26.0	49.0	34.0
20"	11.0	16.0	33.0	62.0	43.0
24"	11.0	24.0	47.0	87.0	62.0

NOTES:
1. WHEN SOFT CLAY IS ENCOUNTERED, THE BEARING AREAS SHALL BE DOUBLED.
2. USE CONCRETE FORMS TO KEEP CONCRETE CLEAR OF ALL BOLTS AND FLANGES.
3. LOCATIONS OF THRUST BLOCKING SHOWN ARE TYPICAL BUT ARE NOT ONLY LOCATIONS BLOCKING MAY BE NEEDED.
4. ALL FITTINGS (INCLUDING NUTS AND BOLTS) TO BE DOUBLE WRAPPED WITH MINIMUM 3 MIL POLY.
5. TABLES PROVIDED MINIMUM BEARING AREA REQUIREMENTS.
6. ALL THRUST BLOCKING SHALL BE 2,500 P.S.I. CONCRETE AND PLACED AGAINST UNDISTURBED SOIL.
7. WIDTH OF BLOCKING EQUAL PIPE O.D. PLUS 1'.
8. TABLE DOES NOT APPLY FOR VERTICAL FORCES. REQUEST DEAD MEN SIZE FROM ENGINEER.

THRUST BLOCKING DETAILS

N.T.S.

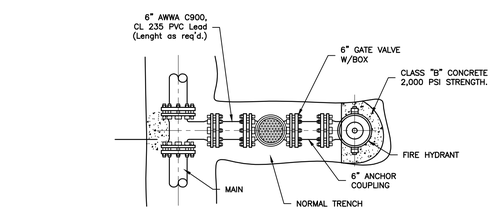

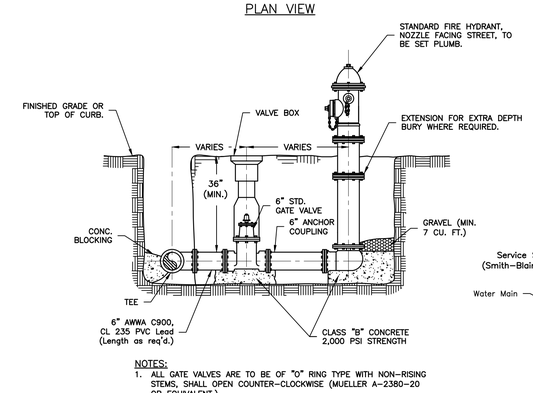

NOTES:
1. ALL GATE VALVES ARE TO BE OF "O" RING TYPE WITH NON-RISING STEMS, SHALL OPEN COUNTER-CLOCKWISE (MUELLER A-2380-20 OR EQUIVALENT.)
2. FIRE HYDRANT TO BE MUELLER "IMPROVED", BREAK-AWAY, OR APPROVED EQUAL.
3. WATER MAINS SHALL NOT BE FULLY PRESSURIZED UNTIL CONCRETE HAS REACHED 15 DAY STRENGTH.
4. VALVE BOX SHALL BE CLOW NATIONAL F-2450, OR APPROVED EQUAL. WITH NO. 6 BASE AND COVER NO. F-2490, OR APPROVED EQUAL.

FIRE HYDRANT ASSEMBLY

N.T.S.

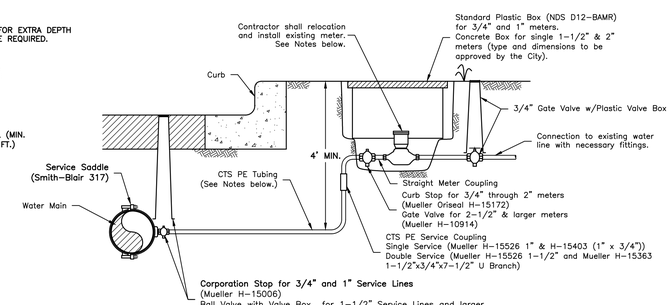

NOTES:
1. City shall provide and install meter, unless noted otherwise.
2. Service Line Size:
   A. Install 1" service line for single meter service.
   B. Install 1-1/2" service line for double meter service.
   C. Install 2" service line for commercial service, as denoted on plans.
3. All fitting shall be provided as shown or approved equal.
4. Near side services may be installed by open cut method. For side services (i.e. service going under pavement) shall be installed by pneumatic piercing tool, directional bore or similar method.
5. Prior to installing the existing meter, the Contractor shall coordinate with City inspector to determine if a new meter will be installed. If a new meter is to be installed, the City will provide the new meter to the Contractor for installation. The existing meter will remain property of the City and shall be delivered to the City.

WATER SEVICE CONNECTION

SCALE: N.T.S.

STATE OF TEXAS
11/09/2016
CHRISTOPHER P. FRERICH
119266
LICENSED
PROFESSIONAL ENGINEER

ISSUED FOR BIDDING AND CONSTRUCTION.

DATE: 11/09/2016
DRAWN BY: CPF
DESIGNED BY: CPF
CHECKED BY: JDB

REVISIONS

McCLURE & BROWNE ENGINEERING/SURVEYING, INC.
Engineer Reg. No. F-458 Survey Reg. No. 10103300
1008 Woodcreek Dr., Suite 103
College Station, Tx. 77845 (979) 693-3838

M&B MBESI No. 10250020

CDH NO. 12-11-03

Construction Standard Details

Sam Houston Avenue Waterline Replacement

SHEET NO.

C4.1

10250022-002-C4.1
100% COMPLETE

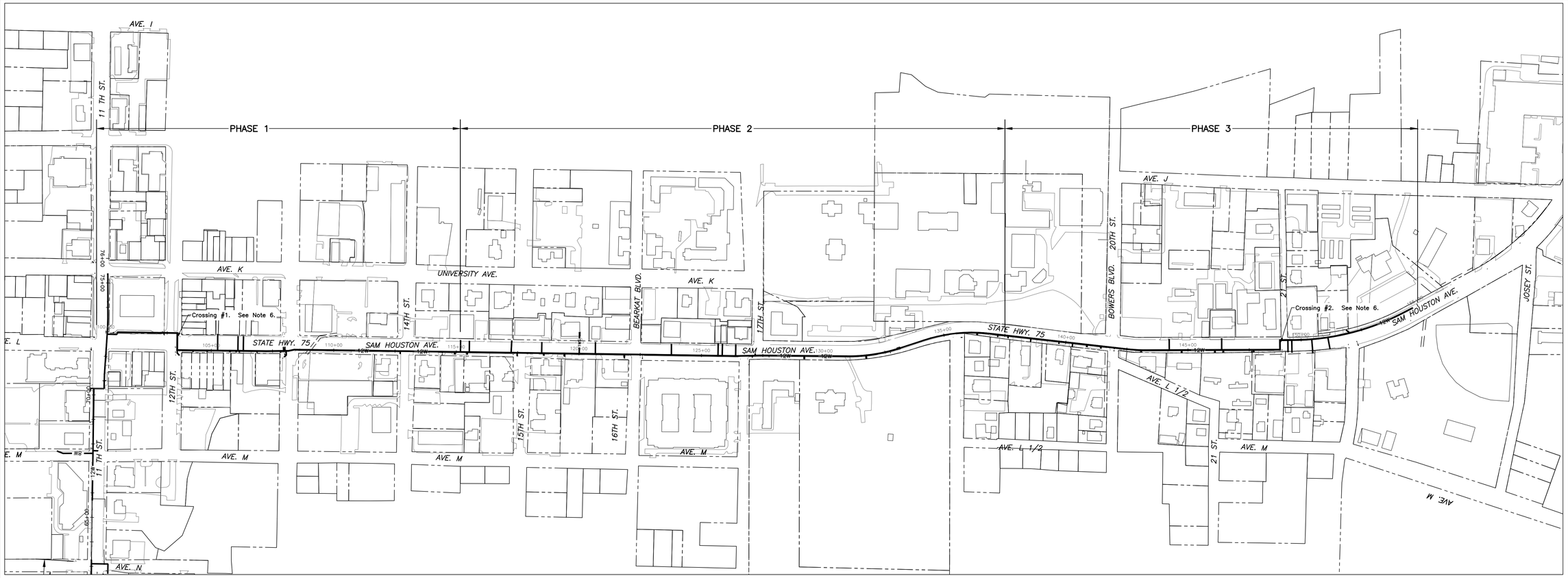

TRAFFIC CONTROL PLAN

SCALE: Hor: 1" = 200'

0 100' 200' 400'

TRAFFIC CONTROL NOTES:

1. Contractor shall keep open one traffic lane in each direction at all times.
2. Contractor shall provide channelizing devices, signage, and flaggers which conform to TxDOT standards.
3. Channelizing devices shall consist of cones, barrels, or LCDs and shall be provided along trench edge until such time the HMAC repairs has been completed.
4. Channelizing devices which are to be utilized over night shall include warning lights as shown in detail BC(7)-14 on sheet C4.3.
5. Any pavement markings which are damaged as part of this project shall be replaced in kind with hot applied thermoplatic (Type 1 Marking Material) installed in accordance with TxDOT Item 666 – Reflectorized Pavement Markings. Prior to placement of the new markings, the existing pavement marking shall be removed and pavement surface cleaned/prepared in accordance with TxDOT 677 and 678.
6. Crossings which are to be constructed by open cut shall be phased to keep at least one lane open in each direction at all times. Steel plates shall be used to cover open trenches when work is not being performed. Construction of crossings should be scheduled to minimize the duration of multiple lane closures to one week or less per crossing.
7. All temporary signage shall comply with TxDOT Barricade Standards and the Texas Manual on Uniform Traffic Control Devices, revision 2 (October 2014).

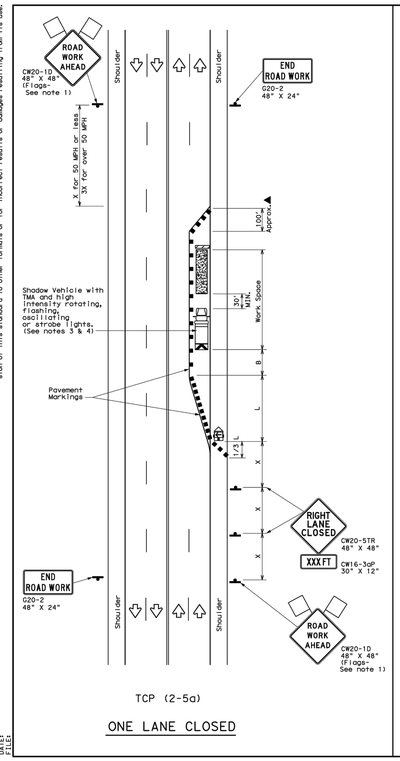

TCP (2-5a)

ONE LANE CLOSED

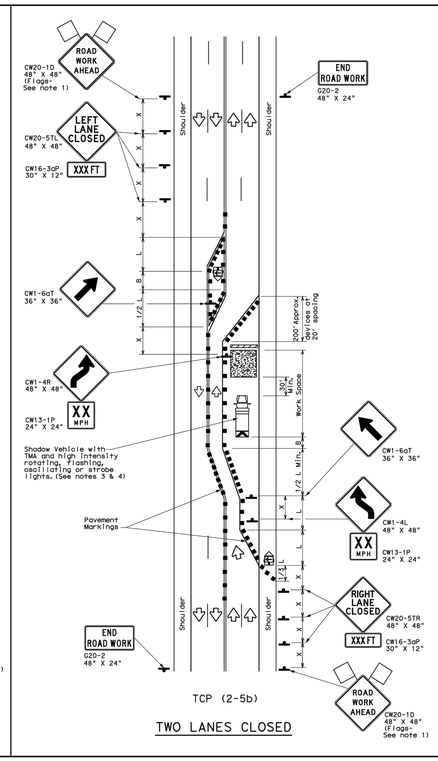

TCP (2-5b)

TWO LANES CLOSED

LEGEND			
	Type 3 Barricade		Channelizing Devices
	Heavy Work Vehicle		Truck Mounted Attenuator (TMA)
	Trailer Mounted Flashing Arrow Board	M	Portable Changeable Message Sign (PCMS)
	Sign		Traffic Flow
	Flag		Flagger

Posted Speed *	Formula	Minimum Desirable Taper Lengths ** 10' Offset	11' Offset	12' Offset	Suggested Maximum Spacing of Channelizing Devices On a Taper	On a Tangent	Minimum Sign Spacing "X" Distance	Suggested Longitudinal Buffer Space "B"
30	$L = \frac{WS^2}{60}$	150'	165'	180'	30'	60'	120'	90'
35		205'	225'	245'	35'	70'	160'	120'
40		265'	295'	320'	40'	80'	240'	155'
45	L=WS	450'	495'	540'	45'	90'	320'	195'
50		500'	550'	600'	50'	100'	400'	240'
55		550'	605'	660'	55'	110'	500'	295'
60		600'	660'	720'	60'	120'	600'	350'
65		650'	715'	780'	65'	130'	700'	410'
70		700'	770'	840'	70'	140'	800'	475'
75		750'	825'	900'	75'	150'	900'	540'

* Conventional Roads Only

** Taper lengths have been rounded off.

L=Length of Taper(FT) W=Width of Offset(FT) S=Posted Speed(MPH)

TYPICAL USAGE				
MOBILE	SHORT DURATION	SHORT TERM STATIONARY	INTERMEDIATE TERM STATIONARY	LONG TERM STATIONARY
			✓	✓

GENERAL NOTES

1. Flags attached to signs where shown, are REQUIRED.
2. All traffic control devices illustrated are REQUIRED, except those denoted with the triangle symbol may be omitted when stated elsewhere in the plans, or for routine maintenance work, when approved by the Engineer.
3. A Shadow Vehicle with a TMA should be used anytime it can be positioned 30 to 100 feet in advance of the area of crew exposure without adversely affecting the performance or quality of the work. If workers are no longer present but road or work conditions require the traffic control to remain in place, Type 3 Barricades or other channelizing devices may be substituted for the Shadow Vehicle and TMA.
4. Additional Shadow Vehicles with TMAs may be positioned in each closed lane, on the shoulder or off the paved surface, next to those shown in order to protect a wider work space.
5. The downstream taper is optional. When used, it should be 100 feet approximately per lane, with channelizing devices spaced at 20 feet.

TCP (2-5a)

6. If this TCP is used for a left lane closure, CW20-5TL "LEFT LANE CLOSED" signs shall be used and channelizing devices shall be placed on the centerline to protect the work space from opposing traffic, with the arrow board placed in the closed lane near the end of the merging taper.

TCP (2-5b)

7. Conflicting pavement markings shall be removed for long-term projects.

For construction or maintenance contract work, specific project requirements for shadow vehicles can be found in the project GENERAL NOTES for Item 502, Barricades, Signs and Traffic Handling.

Texas Department of Transportation
Traffic Operations Division

TRAFFIC CONTROL PLAN
LONG TERM LANE CLOSURES
MULTILANE CONVENTIONAL RDS.

TCP(2-5)-12

© TxDOT December 1985	DN: TxDOT	CK: TxDOT	DW: TxDOT	CK: TxDOT
REVISIONS	CONT	SECT	JOB	HIGHWAY
8-95 2-12				
1-97	DIST		COUNTY	SHEET NO.
4-98				
3-03				
165				

DISCLAIMER: The use of this template is governed by the Texas Engineering Practice Act. Any other use or reproduction without prior written permission is prohibited. The engineer assumes no liability for any use of this document for other projects or for modifications or damages resulting from its use.

DATE:
FILE:

STATE OF TEXAS
CHRISTOPHER P. FREIRICH
119266
LICENSED PROFESSIONAL ENGINEER
11/09/16

ISSUED FOR BIDDING AND CONSTRUCTION.

DATE:	11/09/2016
DRAWN BY:	CPF
DESIGNED BY:	CPF
CHECKED BY:	JDB

REVISIONS

McCLURE & BROWNE ENGINEERING/SURVEYING, INC.
Engineer Reg. No. F-458 Survey Reg. No. 10103300
1008 Woodcreek Dr. Suite 103
College Station, Tx. 77845 (979) 693-3838
M&B MBES/ No. 10250020

CCH NO. 12-11-03

Traffic Control Plan

Sam Houston Avenue Waterline Replacement

SHEET NO.

C4.2

10250022-002-C4.3

100% COMPLETE

DISCLAIMER: The use of this standard is governed by the "Texas Engineering Practice Act". No warranty of any kind is made by TxDOT for any purpose whatsoever. TxDOT assumes no responsibility for the conversion of this standard to other formats or for incorrect results or damages resulting from its use.

BARRICADE AND CONSTRUCTION (BC) STANDARD SHEETS GENERAL NOTES:

1. The Barricade and Construction Standard Sheets (BC sheets) are intended to show typical examples for placement of temporary traffic control devices, construction pavement markings, and typical work zone signs. The information contained in these sheets meet or exceed the requirements shown in the "Texas Manual on Uniform Traffic Control Devices" (TMUTCD).
2. The development and design of the Traffic Control Plan (TCP) is the responsibility of the Engineer.
3. The Contractor may propose changes to the TCP that are signed and sealed by a licensed professional engineer for approval. The Engineer may develop, sign and seal Contractor proposed changes.
4. The Contractor is responsible for installing and maintaining the traffic control devices as shown in the plans. The Contractor may not move or change the approximate location of any device without the approval of the Engineer.
5. Geometric design of lane shifts and detours should, when possible, meet the applicable design criteria contained in manuals such as the American Association of State Highway and Transportation Officials (AASHTO), "A Policy on Geometric Design of Highways and Streets," the TxDOT "Roadway Design Manual" or engineering judgment.
6. When projects abut, the Engineer(s) may omit the END ROAD WORK, TRAFFIC FINES DOUBLE, and other advance warning signs if the signing would be redundant and the work areas appear continuous to the motorists. If the adjacent project is completed first, the Contractor shall erect the necessary warning signs as shown on these sheets, the TCP sheets or as directed by the Engineer. The BEGIN ROAD WORK NEXT X MILES sign shall be revised to show appropriate work zone distance.
7. The Engineer may require duplicate warning signs on the median side of divided highways where median width will permit and traffic volumes justify the signing.
8. All signs shall be constructed in accordance with the details found in the "Standard Highway Sign Designs for Texas," latest edition. Sign details not shown in this manual shall be shown in the plans or the Engineer shall provide a detail to the Contractor before the sign is manufactured.
9. The temporary traffic control devices shown in the illustrations of the BC sheets are examples. As necessary, the Engineer will determine the most appropriate traffic control devices to be used.
10. As shown on BC(2), the OBEY WARNING SIGNS STATE LAW sign, STAY ALERT TALK OR TEXT LATER (see Sign Detail G20-10T) and the WORK ZONE TRAFFIC FINES DOUBLE sign with plaque shall be erected in advance of the CSJ limits. However, the TRAFFIC FINES DOUBLE sign will not be required on projects consisting solely of mobile operation work, such as striping or milling edgeline rumble strips. The BEGIN ROAD WORK NEXT X MILES, CONTRACTOR and END ROAD WORK signs shall be erected at or near the CSJ limits.
11. Except for devices required by Note 10, traffic control devices should be in place only while work is actually in progress or a definite need exists.
12. The Engineer has the final decision on the location of all traffic control devices.
13. Inactive equipment and work vehicles, including workers' private vehicles must be parked away from travel lanes. They should be as close to the right-of-way line as possible, or located behind a barrier or guardrail, or as approved by the Engineer.

WORKER SAFETY APPAREL NOTES:

1. Workers on foot who are exposed to traffic or to construction equipment within the right-of-way shall wear high-visibility safety apparel meeting the requirements of ISEA "American National Standard for High-Visibility Apparel," or equivalent revisions, and labeled as ANSI 107-2004 standard performance for Class 2 or 3 risk exposure. Class 3 garments should be considered for high traffic volume work areas or night time work.

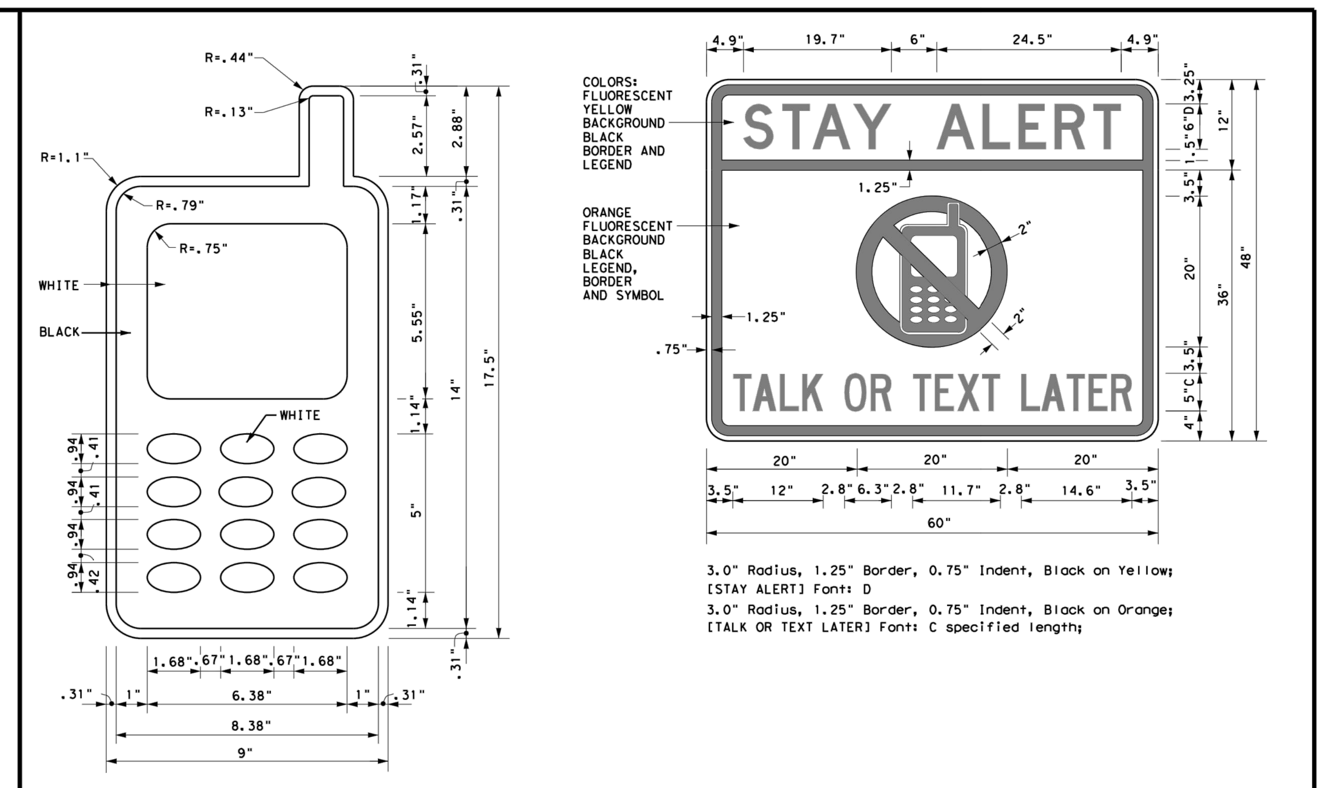

3.0" Radius, 1.25" Border, 0.75" Indent, Black on Yellow; [STAY ALERT] Font: D
3.0" Radius, 1.25" Border, 0.75" Indent, Black on Orange; [TALK OR TEXT LATER] Font: C specified length;

SIGN DETAIL (G20-10T)

Only pre-qualified products shall be used. The "Compliant Work Zone Traffic Control Devices List" (CWZTCD) describes pre-qualified products and their sources and may be found on-line at the web address given below or by contacting:

Texas Department of Transportation
Traffic Operations Division - TE
Phone (512) 416-3118

THE DOCUMENTS BELOW CAN BE FOUND ON-LINE AT http://www.txdot.gov
COMPLIANT WORK ZONE TRAFFIC CONTROL DEVICES LIST (CWZTCD)
DEPARTMENTAL MATERIAL SPECIFICATIONS (DMS)
MATERIAL PRODUCER LIST (MPL)
ROADWAY DESIGN MANUAL - SEE "MANUALS (ONLINE MANUALS)"
STANDARD HIGHWAY SIGN DESIGNS FOR TEXAS (SHSD)
TEXAS MANUAL ON UNIFORM TRAFFIC CONTROL DEVICES (TMUTCD)
TRAFFIC ENGINEERING STANDARD SHEETS

SHEET 1 OF 12

Texas Department of Transportation — Traffic Operations Division Standard

BARRICADE AND CONSTRUCTION GENERAL NOTES AND REQUIREMENTS

BC(1)-14

FILE: bc-14.dgn | DN: TxDOT | CK: TxDOT | DW: TxDOT | CK: TxDOT
© TxDOT November 2002 | CONT | SECT | JOB | HIGHWAY
REVISIONS 4-03 5-10 8-14 9-07 7-13 | DIST | COUNTY | SHEET NO.
95

DISCLAIMER: The use of this standard is governed by the "Texas Engineering Practice Act". No warranty of any kind is made by TxDOT for any purpose whatsoever. TxDOT assumes no responsibility for the conversion of this standard to other formats or for incorrect results or damages resulting from its use.

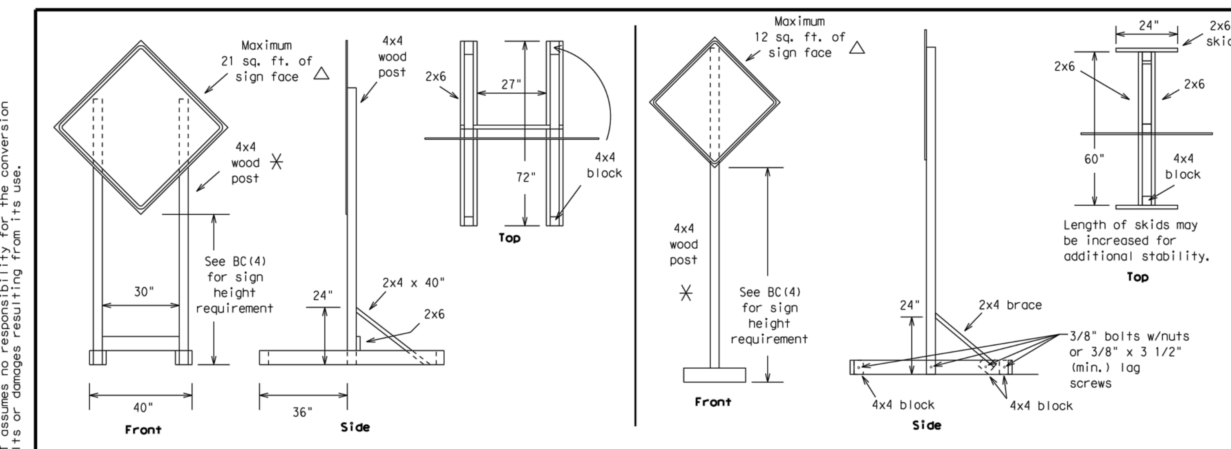

SKID MOUNTED WOOD SIGN SUPPORTS

LONG/INTERMEDIATE TERM STATIONARY - PORTABLE SKID MOUNTED SIGN SUPPORTS ☐

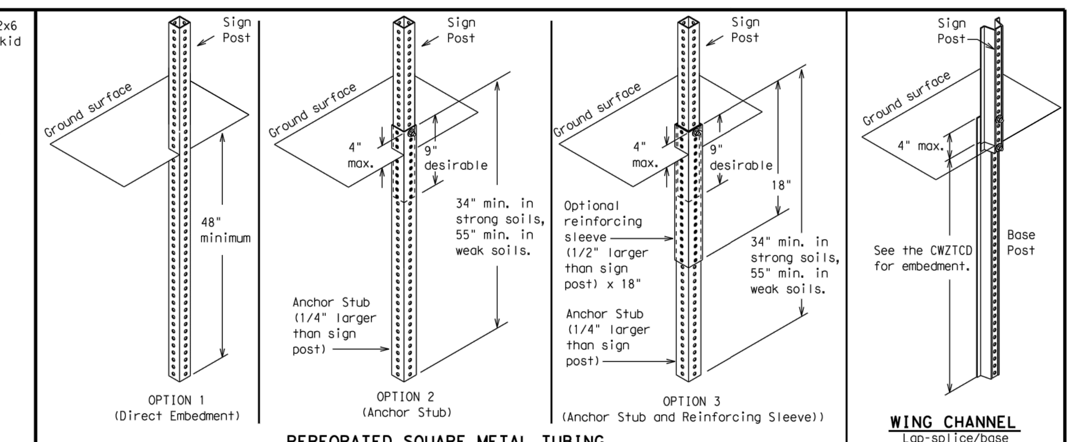

PERFORATED SQUARE METAL TUBING

WING CHANNEL
Lap-splice/base bolted anchor

GROUND MOUNTED SIGN SUPPORTS

Refer to the CWZTCD and the manufacturer's installation procedure for each type sign support. The maximum sign square footage shall adhere to the manufacturer's recommendation. Two post installations can be used for larger signs.

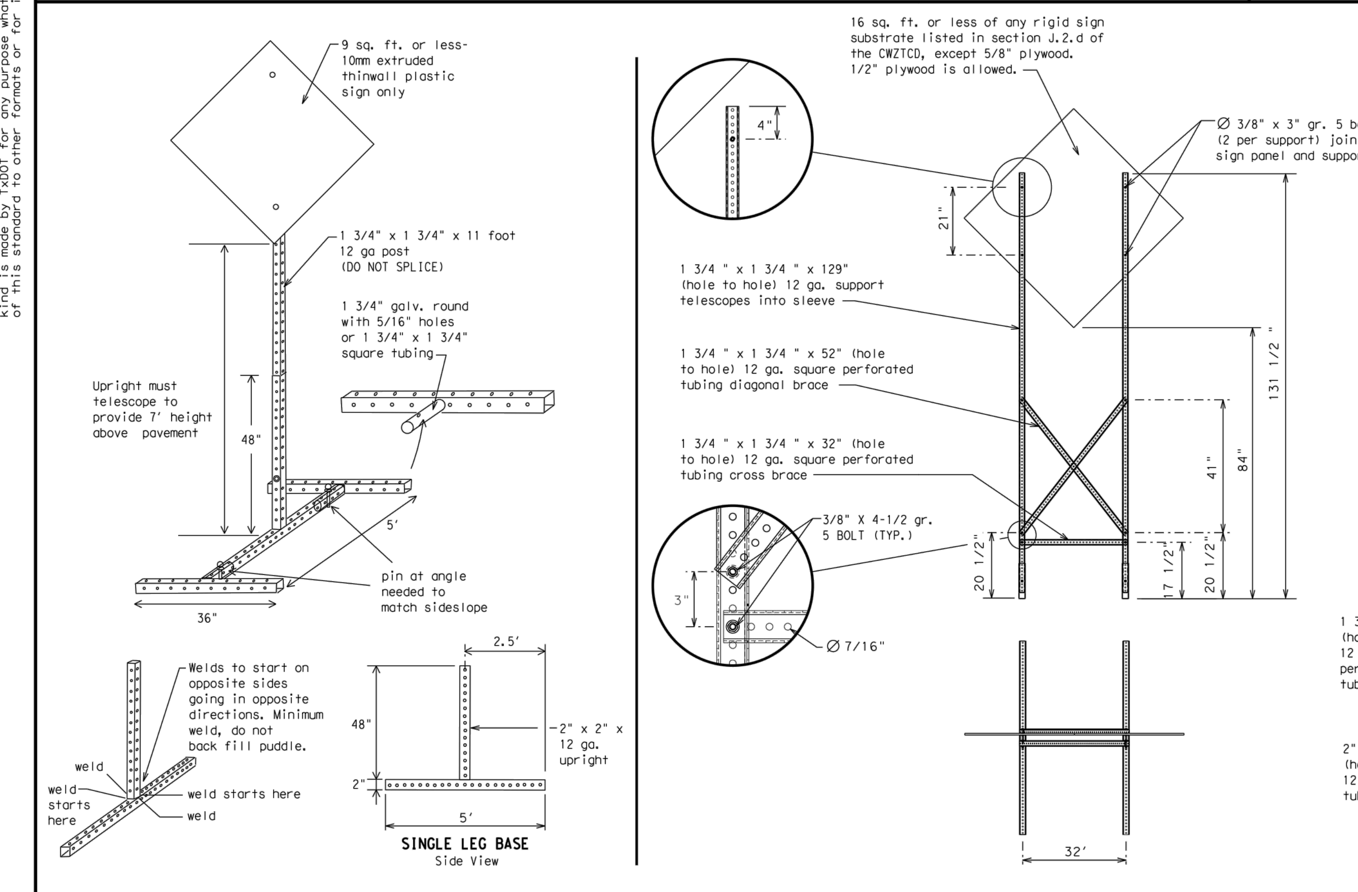

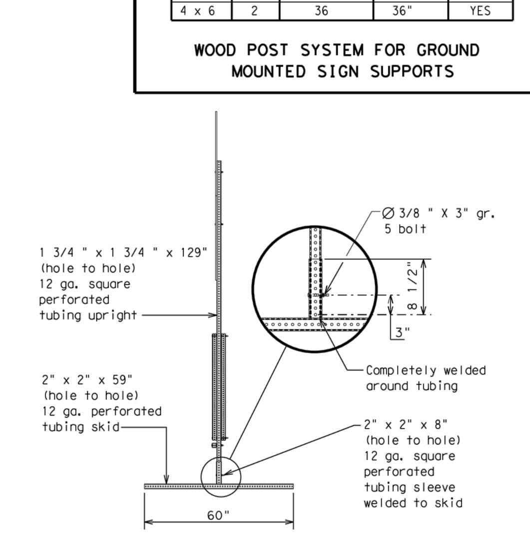

SKID MOUNTED PERFORATED SQUARE STEEL TUBING SIGN SUPPORTS

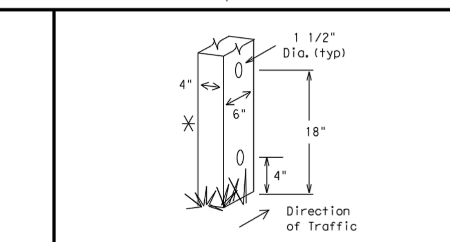

Nominal Post Size	Number of Posts	Maximum Sq. feet of Sign Face	Minimum Soil Embedment	Drilled Hole(s) Required
4 x 4	1	12	36"	NO
4 x 4	2	21	36"	NO
4 x 6	1	21	36"	YES
4 x 6	2	36	36"	YES

WOOD POST SYSTEM FOR GROUND MOUNTED SIGN SUPPORTS

WEDGE ANCHORS

Both steel and plastic Wedge Anchor Systems as shown on the SMD Standard Sheets may be used as temporary sign supports for signs up to 10 square feet of sign face. They may be set in concrete or in sturdy soils if approved by the Engineer. (See web address for "Traffic Engineering Standard Sheets" on BC(1)).

OTHER DESIGNS

MORE DETAILS OF APPROVED LONG/INTERMEDIATE AND SHORT TERM SUPPORTS CAN BE FOUND ON THE CWZTCD LIST. SEE BC(1) FOR WEBSITE LOCATION.

GENERAL NOTES

1. Nails may be used in the assembly of wooden sign supports, but 3/8" bolts with nuts or 3/8" x 3 1/2" lag screws must be used on every joint for final connection.
2. No more than 2 sign posts shall be placed within a 7 ft. circle, except for specific materials noted on the CWZTCD List.
3. When project is completed, all sign supports and foundations shall be removed from the project site. This will be considered subsidiary to Item 502.

☐ See BC(4) for definition of "Work Duration."

⚹ Wood sign posts MUST be one piece. Splicing will NOT be allowed. Posts shall be painted white.

△ See the CWZTCD for the type of sign substrate that can be used for each approved sign support.

SHEET 5 OF 12

Texas Department of Transportation — Traffic Operations Division Standard

BARRICADE AND CONSTRUCTION TYPICAL SIGN SUPPORT

BC(5)-14

FILE: bc-14.dgn | DN: TxDOT | CK: TxDOT | DW: TxDOT | CK: TxDOT
© TxDOT November 2002 | CONT | SECT | JOB | HIGHWAY
REVISIONS 9-07 8-14 7-13 | DIST | COUNTY | SHEET NO.
99

DISCLAIMER: The use of this standard is governed by the "Texas Engineering Practice Act". No warranty of any kind is made by TxDOT for any purpose whatsoever. TxDOT assumes no responsibility for the conversion of this standard to other formats or for incorrect results or damages resulting from its use.

TYPICAL MINIMUM CLEARANCES FOR LONG TERM AND INTERMEDIATE TERM SIGNS

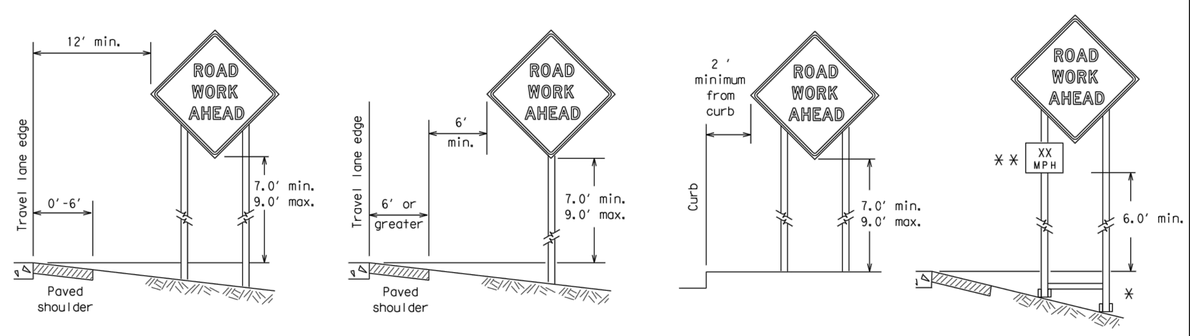

⚹ When placing skid supports on unlevel ground, the leg post lengths must be adjusted so the sign appears straight and plumb. Objects shall NOT be placed under skids as a means of leveling.

⚹⚹ When plaques are placed on dual-leg supports, they should be attached to the upright nearest the travel lane. Supplemental plaques (advisory or distance) should not cover the surface of the parent sign.

ATTACHMENT FOR SIGN SUPPORTS

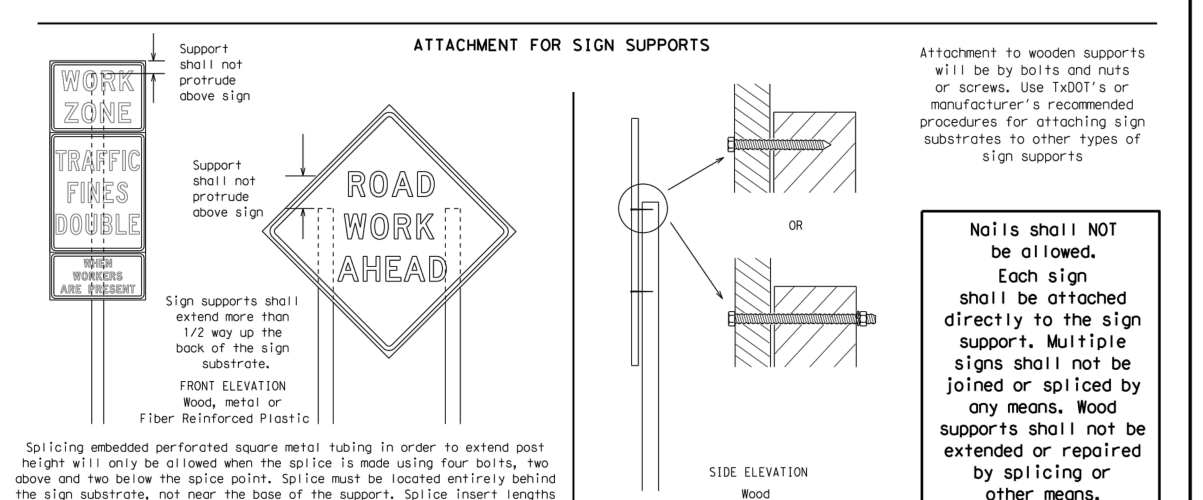

Splicing embedded perforated square metal tubing in order to extend post height will only be allowed when the splice is made using four bolts, two above and two below the spice point. Splice must be located entirely behind the sign substrate, not near the base of the support. Splice insert lengths should be at least 5 times nominal post size, centered on the splice and of at least the same gauge material.

Attachment to wooden supports will be by bolts and nuts or screws. Use TxDOT's or manufacturer's recommended procedures for attaching sign substrates to other types of sign supports

Nails shall NOT be allowed. Each sign shall be attached directly to the sign support. Multiple signs shall not be joined or spliced by any means. Wood supports shall not be extended or repaired by splicing or other means.

STOP/SLOW PADDLES

1. STOP/SLOW paddles are the primary method to control traffic by flaggers. The STOP/SLOW paddle size should be 24" x 24" as detailed below.
2. When used at night, the STOP/SLOW paddle shall be retroreflectorized.
3. STOP/SLOW paddles may be attached to a staff with a minimum length of 6' to the bottom of the sign.
4. Any lights incorporated into the STOP or SLOW paddle faces shall only be as specifically described in Section 6E.03 Hand Signaling Devices in the TMUTCD.

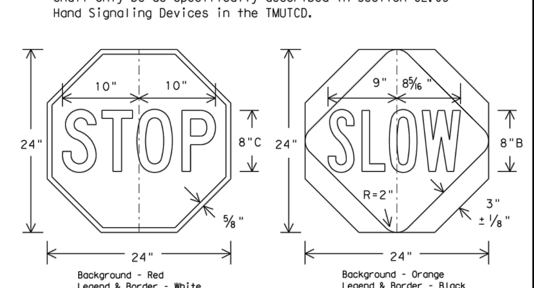

CONTRACTOR REQUIREMENTS FOR MAINTAINING PERMANENT SIGNS WITHIN THE PROJECT LIMITS

1. Permanent signs are used to give notice of traffic laws or regulations, call attention to conditions that are potentially hazardous to traffic operations, show route designations, destinations, directions, distances, services, points of interest, and other geographical, recreational, or cultural information. Drivers proceeding through a work zone need the same, if not better route guidance as normally installed on a roadway without construction.
2. When permanent regulatory or warning signs conflict with work zone conditions, remove or cover the permanent signs until the permanent sign message matches the roadway condition.
3. When existing permanent signs are moved and relocated due to construction purposes, they shall be visible to motorists at all times.
4. If existing signs are to be relocated on their original supports, they shall be installed on crashworthy bases as shown on the SMD Standard sheets. The signs shall meet the required mounting heights shown on the BC Sheets or the SMD Standards. This work should be paid for under the appropriate pay item for relocating existing signs.
5. If permanent signs are to be removed and relocated using temporary supports, the Contractor shall use crashworthy supports as shown on the BC sheets or the CWZTCD. The signs shall meet the required mounting heights shown on the BC Sheets or the SMD Standards during construction. This work should be paid for under the appropriate pay item for relocating existing signs.
6. Any sign or traffic control device that is struck or damaged by the Contractor or his/her construction equipment shall be replaced as soon as possible by the Contractor to ensure proper guidance for the motorists. This will be subsidiary to Item 502.

GENERAL NOTES FOR WORK ZONE SIGNS

1. Contractor shall install and maintain signs in a straight and plumb condition and/or as directed by the Engineer.
2. Wooden sign posts shall be painted white.
3. Barricades shall NOT be used as sign supports.
4. All signs shall be installed in accordance with the plans or as directed by the Engineer. Signs shall be used to regulate, warn, and guide the traveling public safely through the work zone.
5. The Contractor may furnish either the sign design shown in the plans or in the "Standard Highway Sign Designs for Texas" (SHSD). The Engineer/Inspector may require the Contractor to furnish other work zone signs that are shown in the TMUTCD but may have been omitted from the plans. Any variation in the plans shall be documented by written agreement between the Engineer and the Contractor's Responsible Person. All changes must be documented in writing before being implemented. This can include documenting the changes in the Inspector's TxDOT diary and having both the Inspector and Contractor initial and date the agreed upon changes.
6. The Contractor shall furnish sign supports listed in the "Compliant Work Zone Traffic Control Device List" (CWZTCD). The Contractor shall install the sign support in accordance with the manufacturer's recommendations. If there is a question regarding installation procedures, the Contractor shall furnish the Engineer a copy of the manufacturer's installation recommendations so the Engineer can verify the correct procedures are being followed.
7. The Contractor is responsible for installing signs on approved supports and replacing signs with damaged or cracked substrates and/or damaged or marred reflective sheeting as directed by the Engineer/Inspector.
8. Identification markings may be shown only on the back of the sign substrate. The maximum height of letters and/or company logos used for identification shall be 1 inch.
9. The Contractor shall replace damaged wood posts. New or damaged wood sign posts shall not be spliced.

DURATION OF WORK (as defined by the "Texas Manual on Uniform Traffic Control Devices" Part 6)

1. The types of sign supports, sign mounting height, the size of signs, and the type of sign substrates can vary based on the type of work being performed. The Engineer is responsible for selecting the appropriate size sign for the type of work being performed. The Contractor is responsible for ensuring the sign support, sign mounting height and substrate meets manufacturer's recommendations in regard to crashworthiness and duration of work requirements.
   a. Long-term stationary - work that occupies a location more than 3 days.
   b. Intermediate-term stationary - work that occupies a location more than one daylight period up to 3 days, or nighttime work lasting more than one hour.
   c. Short-term stationary - daytime work that occupies a location for more than 1 hour in a single daylight period.
   d. Short, duration - work that occupies a location up to 1 hour.
   e. Mobile - work that moves continuously or intermittently (stopping for up to approximately 15 minutes.)

SIGN MOUNTING HEIGHT

1. The bottom of Long-term/Intermediate-term signs shall be at least 7 feet, but not more than 9 feet, above the paved surface, except as shown for supplemental plaques mounted below other signs.
2. The bottom of Short-term/Short Duration signs shall be a minimum of 1 foot above the pavement surface but no more than 2 feet above the ground.
3. Long-term/Intermediate-term Signs may be used in lieu of Short-term/Short Duration signing.
4. Short-term/Short Duration signs shall be used only during daylight and shall be removed at the end of the workday or raised to appropriate Long-term/Intermediate sign height.
5. Regulatory signs shall be mounted at least 7 feet, but not more than 9 feet, above the paved surface regardless of work duration.

SIZE OF SIGNS

1. The Contractor shall furnish the sign sizes shown on BC (2) unless otherwise shown in the plans or as directed by the Engineer.

SIGN SUBSTRATES

1. The Contractor shall ensure the sign substrate is installed in accordance with the manufacturer's recommendations for the type of sign support that is being used. The CWZTCD lists each substrate that can be used on the different types and models of sign supports.
2. "Mesh" type materials are NOT an approved sign substrate, regardless of the tightness of the weave.
3. All wooden individual sign panels fabricated from 2 or more pieces shall have one or more plywood cleat, 1/2" thick by 6" wide, fastened to the back of the sign and extending fully across the sign. The cleat shall be attached to the back of the sign using wood screws that do not penetrate the face of the sign panel. The screws shall be placed on both sides of the splice and spaced at 6" centers. The Engineer may approve other methods of splicing the sign face.

REFLECTIVE SHEETING

1. All signs shall be retroreflective and constructed of sheeting meeting the color and retro-reflectivity requirements of DMS-8300 for rigid signs or DMS-8310 for roll-up signs. The web address for DMS specifications is shown on BC(1).
2. White sheeting, meeting the requirements of DMS-8300 Type A, shall be used for signs with a white background.
3. Orange sheeting, meeting the requirements of DMS-8300 Type B_{FL} or Type C_{FL}, shall be used for rigid signs with orange backgrounds.

SIGN LETTERS

1. All sign letters and numbers shall be clear, and open rounded type uppercase alphabet letters as approved by the Federal Highway Administration (FHWA) and as published in the "Standard Highway Sign Design for Texas" manual. Signs, letters and numbers shall be of first class workmanship in accordance with Department Standards and Specifications.

REMOVING OR COVERING

1. When sign messages may be confusing or do not apply, the signs shall be removed or completely covered.
2. Long-term stationary or intermediate stationary signs installed on square metal tubing may be turned away from traffic 90 degrees when the sign message is not applicable. This technique may not be used for signs installed in the median of divided highways or near any intersections where the sign may be seen from approaching traffic.
3. Signs installed on wooden skids shall not be turned at 90 degree angles to the roadway. These signs should be removed or completely covered when not required.
4. When signs are covered, the material used shall be opaque, such as heavy mil black plastic, or other materials which will cover the entire sign face and maintain their opaque properties under automobile headlights at night, without damaging the sign sheeting.
5. Burlap shall NOT be used to cover signs.
6. Duct tape or other adhesive material shall NOT be affixed to a sign face.
7. Signs and anchor stubs shall be removed and holes backfilled upon completion of work.

SIGN SUPPORT WEIGHTS

1. Where sign supports require the use of weights to keep from turning over, the use of sandbags with dry, cohesionless sand should be used.
2. The sandbags will be tied shut to keep the sand from spilling and to maintain a constant weight.
3. Rock, concrete, iron, steel or other solid objects shall not be permitted for use as sign support weights.
4. Sandbags should weigh a minimum of 35 lbs and a maximum of 50 lbs.
5. Sandbags shall be made of a durable material that tears upon vehicular impact. Rubber (such as tire inner tubes) shall NOT be used.
6. Rubber ballasts designed for channelizing devices should not be used for ballast on portable sign supports. Sign supports designed and manufactured with rubber bases may be used when shown on the CWZTCD list.
7. Sandbags shall only be placed along or laid over the base supports of the traffic control device and shall not be suspended above ground level or hung with rope, wire, chains or other fasteners. Sandbags shall be placed along the length of the skids to weigh down the sign support.
8. Sandbags shall NOT be placed under the skid and shall not be used to level sign supports placed on slopes.

FLAGS ON SIGNS

1. Flags may be used to draw attention to warning signs. When used the flag shall be 16 inches square or larger and shall be orange or fluorescent red-orange in color. Flags shall not be allowed to cover any portion of the sign face.

SHEET 4 OF 12

Texas Department of Transportation — Traffic Operations Division Standard

BARRICADE AND CONSTRUCTION TEMPORARY SIGN NOTES

BC(4)-14

FILE: bc-14.dgn | DN: TxDOT | CK: TxDOT | DW: TxDOT | CK: TxDOT
© TxDOT November 2002 | CONT | SECT | JOB | HIGHWAY
REVISIONS 9-07 8-14 7-13 | DIST | COUNTY | SHEET NO.
98

DISCLAIMER: The use of this standard is governed by the "Texas Engineering Practice Act". No warranty of any kind is made by TxDOT for any purpose whatsoever. TxDOT assumes no responsibility for the conversion of this standard to other formats or for incorrect results or damages resulting from its use.

1. Barrier Reflectors shall be pre-qualified, and conform to the color and reflectivity requirements of DMS-8600. A list of prequalified Barrier Reflectors can be found at the Material Producer List web address shown on BC(1).
2. Color of Barrier Reflectors shall be as specified in the TMUTCD. The cost of the reflectors shall be considered subsidiary to Item 512.

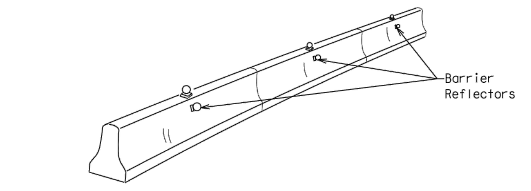

CONCRETE TRAFFIC BARRIER (CTB)

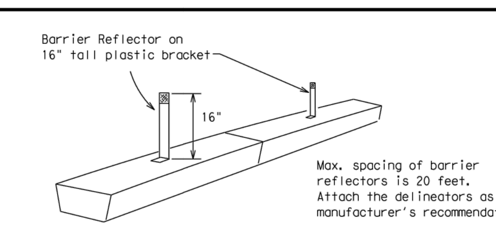

LOW PROFILE CONCRETE BARRIER (LPCB)

3. Where traffic is on one side of the CTB, two (2) Barrier Reflectors shall be mounted in approximately the midsection of each section of CTB. An alternate mounting location is uniformly spaced at one end of each CTB. This will allow for attachment of a barrier grapple without damaging the reflector. The Barrier Reflector mounted on the side of the CTB shall be located directly below the reflector mounted on top of the barrier, as shown in the detail above.
4. Where CTB separates two-way traffic, three barrier reflectors shall be mounted on each section of CTB. The reflector unit on top shall have two yellow reflective faces (Bi-Directional) while the reflectors on each side of the barrier shall have one yellow reflective face, as shown in the detail above.
5. When CTB separates traffic traveling in the same direction, no barrier reflectors will be required on top of the CTB.
6. Barrier Reflector units shall be yellow or white in color to match the edgeline being supplemented.
7. Maximum spacing of Barrier Reflectors is forty (40) feet.
8. Pavement markers or temporary flexible-reflective roadway marker tabs shall NOT be used as CTB delineation.
9. Attachment of Barrier Reflectors to CTB shall be per manufacturer's recommendations.
10. Missing or damaged Barrier Reflectors shall be replaced as directed by the Engineer.
11. Single slope barriers shall be delineated as shown on the above detail.

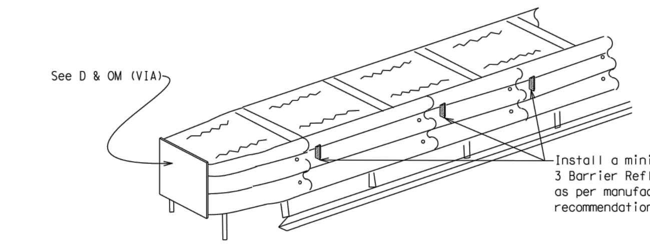

DELINEATION OF END TREATMENTS

END TREATMENTS FOR CTB'S USED IN WORK ZONES

End treatments used on CTB's in work zones shall meet crashworthy standards as defined in the National Cooperative Highway Research Report 350. Refer to the CWZTCD List for approved end treatments and manufacturers.

BARRIER REFLECTORS FOR CONCRETE TRAFFIC BARRIER AND ATTENUATORS

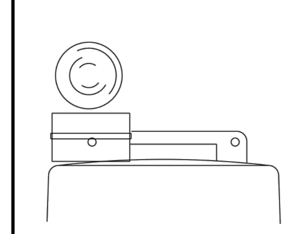

Type C Warning Light or approved substitute mounted on a drum adjacent to the travel way.

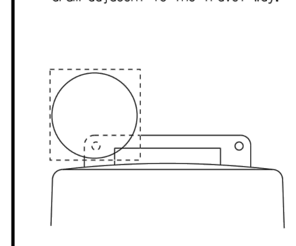

Warning reflector may be round or square. Must have a yellow reflective surface area of at least 30 square inches

WARNING LIGHTS

1. Warning lights shall meet the requirements of the TMUTCD.
2. Warning lights shall NOT be installed on barricades.
3. Type A-Low Intensity Flashing Warning Lights are commonly used with drums. They are intended to warn of or mark a potentially hazardous area. Their use shall be as indicated on this sheet and/or other sheets of the plans by the designation "FL". The Type A Warning Lights shall not be used with signs manufactured with Type B_{FL} or C_{FL} Sheeting meeting the requirements of Departmental Material Specification DMS-8300.
4. Type-C and Type D 360 degree Steady Burn Lights are intended to be used in a series for delineation to supplement other traffic control devices. Their use shall be as indicated on this sheet and/or other sheets of the plans by the designation "SB".
5. The Engineer/Inspector or the plans shall specify the location and type of warning lights to be installed on the traffic control devices.
6. When required by the Engineer, the Contractor shall furnish a copy of the warning lights certification. The warning light manufacturer will certify the warning lights meet the requirements of the latest ITE Purchase Specifications for Flashing and Steady-Burn Warning Lights.
7. When used to delineate curves, Type-C and Type D Steady Burn Lights should only be placed on the outside of the curve, not the inside.
8. The location of warning lights and warning reflectors on drums shall be as shown elsewhere in the plans.

WARNING LIGHTS MOUNTED ON PLASTIC DRUMS

1. Type A flashing warning lights are intended to warn drivers that they are approaching or are in a potentially hazardous area.
2. Type A random flashing warning lights are not intended for delineation and shall not be used in a series.
3. A series of sequential flashing warning lights placed on channelizing devices to form a merging taper may be used for delineation. If used, the successive flashing of the sequential warning lights should occur from the beginning of the taper to the end of the merging taper in order to identify the desired vehicle path. The rate of flashing for each light shall be 65 flashes per minute, plus or minus 10 flashes.
4. Type C and D steady-burn warning lights are intended to be used in a series to delineate the edge of the travel lane on detours, on lane changes, on lane closures, and on other similar conditions.
5. Type A, Type C and Type D warning lights shall be installed at locations as detailed on other sheets in the plans.
6. Warning lights shall not be installed on a drum that has a sign, chevron or vertical panel.
7. The maximum spacing for warning lights on drums should be identical to the channelizing device spacing.

WARNING REFLECTORS MOUNTED ON PLASTIC DRUMS AS A SUBSTITUTE FOR TYPE C (STEADY BURN) WARNING LIGHTS

1. A warning reflector or approved substitute may be mounted on a plastic drum as a substitute for a Type C, steady burn warning light at the discretion of the Contractor unless otherwise noted in the plans.
2. The warning reflector shall be yellow in color and shall be manufactured using a sign substrate approved for use with plastic drums listed on the CWZTCD.
3. The warning reflector shall have a minimum retroreflective surface area (one-side) of 30 square inches.
4. Round reflectors shall be fully reflectorized, including the area where attached to the drum.
5. Square substrates must have a minimum of 30 square inches of reflectorized sheeting. They do not have to be reflectorized where it attaches to the drum.
6. The side of the warning reflector facing approaching traffic shall have sheeting meeting the color and retroreflectivity requirements for DMS 8300-Type B or Type C.
7. When used near two-way traffic, both sides of the warning reflector shall be reflectorized.
8. The warning reflector should be mounted on the side of the handle nearest approaching traffic.
9. The maximum spacing for warning reflectors should be identical to the channelizing device spacing requirements.

Arrow Boards may be located behind channelizing devices in place for a shoulder taper or merging taper, otherwise they shall be delineated with four (4) channelizing devices placed perpendicular to traffic on the upstream side of traffic.

1. The Flashing Arrow Board should be used for all lane closures on multi-lane roadways, or slow moving maintenance or construction activities on the travel lanes.
2. Flashing Arrow Boards should not be used on two-lane, two-way roadways, detours, diversions or work on shoulders unless the "CAUTION" display (see detail below) is used.
3. The Engineer/Inspector shall choose all appropriate signs, barricades and/or other traffic control devices that should be used in conjunction with the Flashing Arrow Board.
4. The Flashing Arrow Board should be able to display the following symbols:

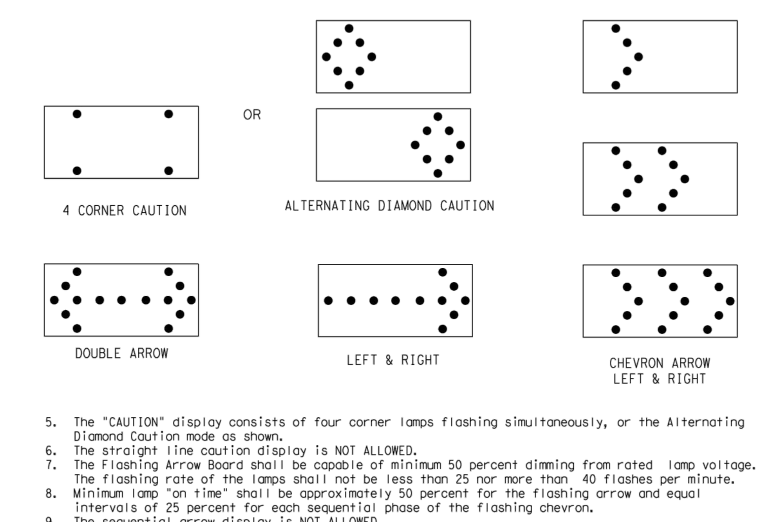

5. The "CAUTION" display consists of four corner lamps flashing simultaneously, or the Alternating Diamond Caution mode as shown.
6. The straight line caution display is NOT ALLOWED.
7. The Flashing Arrow Board shall be capable of minimum 50 percent dimming from rated lamp voltage. The flashing rate of the lamps shall not be less than 25 nor more than 40 flashes per minute.
8. Minimum lamp "on time" shall be approximately 50 percent for the flashing arrow and equal intervals of 25 percent for each sequential phase of the flashing chevron.
9. The sequential arrow display is NOT ALLOWED.
10. The flashing arrow display is the TxDOT standard; however, the sequential Chevron display may be used during daylight operations.
11. The Flashing Arrow Board shall be mounted on a vehicle, trailer or other suitable support.
12. A Flashing Arrow Board SHALL NOT BE USED to laterally shift traffic.
13. A full matrix PCMS may be used to simulate a Flashing Arrow Board provided it meets visibility, flash rate and dimming requirements on this sheet for the same size arrow.
14. Minimum mounting height of trailer mounted Arrow Boards should be 7 feet from roadway to bottom of panel.

REQUIREMENTS			
TYPE	MINIMUM SIZE	MINIMUM NUMBER OF PANEL LAMPS	MINIMUM VISIBILITY DISTANCE
B	30 x 60	13	3/4 mile
C	48 x 96	15	1 mile

ATTENTION
Flashing Arrow Boards shall be equipped with automatic dimming devices.

WHEN NOT IN USE, REMOVE THE ARROW BOARD FROM THE RIGHT-OF-WAY OR PLACE THE ARROW BOARD BEHIND CONCRETE TRAFFIC BARRIER OR GUARDRAIL.

FLASHING ARROW BOARDS

TRUCK-MOUNTED ATTENUATORS

1. Truck-mounted attenuators (TMA) used on TxDOT facilities must meet the requirements outlined in the National Cooperative Highway Research Report No. 350 (NCHRP 350) or the Manual for Assessing Safety Hardware (MASH).
2. Refer to the CWZTCD for the requirements of Level 2 or Level 3 TMAs.
3. Refer to the CWZTCD for a list of approved TMAs.
4. TMAs are required on freeways unless otherwise noted in the plans.
5. A TMA should be used anytime that it can be positioned 30 to 100 feet in advance of the area of crew exposure without adversely affecting the work performance.
6. The only reason a TMA should not be required is when a work area is spread down the roadway and the work crew is an extended distance from the TMA.

SHEET 7 OF 12

Texas Department of Transportation — Traffic Operations Division Standard

BARRICADE AND CONSTRUCTION ARROW PANEL, REFLECTORS, WARNING LIGHTS & ATTENUATOR

BC(7)-14

FILE: bc-14.dgn | DN: TxDOT | CK: TxDOT | DW: TxDOT | CK: TxDOT
© TxDOT November 2002 | CONT | SECT | JOB | HIGHWAY
REVISIONS 9-07 8-14 7-13 | DIST | COUNTY | SHEET NO.
101

STATE OF TEXAS — 11/09/2016 — CHRISTOPHER P. FRERICH — 119266 — LICENSED PROFESSIONAL ENGINEER

ISSUED FOR BIDDING AND CONSTRUCTION.

DATE: 11/09/2016
DRAWN BY: CPF
DESIGNED BY: CPF
CHECKED BY: JDB

REVISIONS

City of Huntsville
COH NO. 12-11-03

McCLURE & BROWNE ENGINEERING/SURVEYING, INC.
Engineer Reg. No. F-458 · Survey Reg. No. 101033-00
1008 Woodcreek Dr., Suite 103
College Station, Tx. 77845 · (979) 693-3838

M&B
MBESI No. 10250020

Traffic Control Details

Sam Houston Avenue Waterline Replacement

SHEET NO.

C4.3

10250022-002-C4.3
100% COMPLETE

DISCLAIMER: The use of this standard is governed by the "Texas Engineering Practice Act". No warranty of any kind is made by TxDOT for any purpose whatsoever. TxDOT assumes no responsibility for the conversion of this standard to other formats or for incorrect results or damages resulting from its use.

DATE:
FILE:

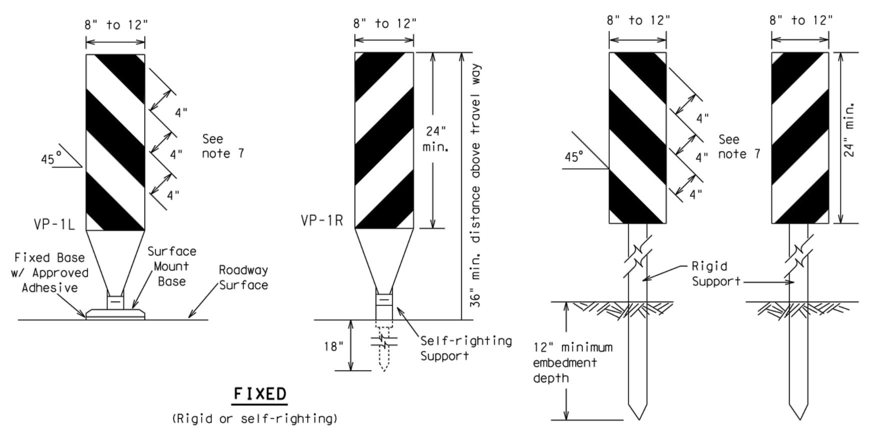

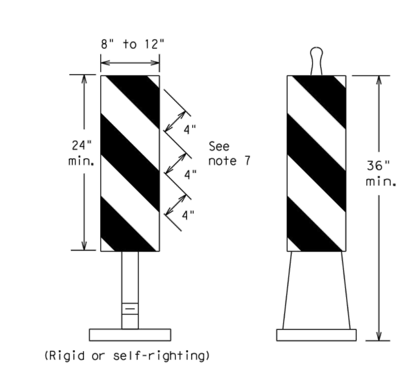

1. Vertical Panels (VP's) are normally used to channelize traffic or divide opposing lanes of traffic.
2. VP's may be used in daytime or nighttime situations. They may be used at the edge of shoulder drop-offs and other areas such as lane transitions where positive daytime and nighttime delineation is required. The Engineer/Inspector shall refer to the Roadway Design Manual Appendix B "Treatment of Pavement Drop-offs in Work Zones" for additional guidelines on the use of VP's for drop-offs.
3. VP's should be mounted back to back if used at the edge of cuts adjacent to two-way two lane roadways. Stripes are to be reflective orange and reflective white and should always slope downward toward the travel lane.
4. VP's used on expressways and freeways or other high speed roadways, may have more than 270 square inches of retroreflective area facing traffic.
5. Self-righting supports are available with portable base. See "Compliant Work Zone Traffic Control Devices List" (CWZTCD).
6. Sheeting for the VP's shall be retroreflective Type A conforming to Departmental Material Specification DMS-8300, unless noted otherwise.
7. Where the height of reflective material on the vertical panel is 36 inches or greater, a panel stripe of 6 inches shall be used.

VERTICAL PANELS (VPs)

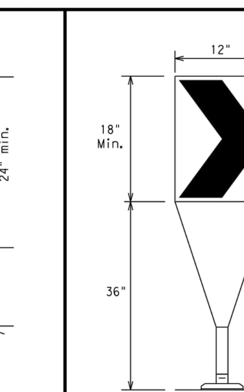

1. The chevron shall be a vertical rectangle with a minimum size of 12 by 18 inches.
2. Chevrons are intended to give notice of a sharp change of alignment with the direction of travel and provide additional emphasis and guidance for vehicle operators with regard to changes in horizontal alignment of the roadway.
3. Chevrons, when used, shall be erected on the outside of a sharp curve or turn, or on the far side of an intersection. They shall be in line with and at right angles to approaching traffic. Spacing should be such that the motorist always has three in view, until the change in alignment eliminates its need.
4. To be effective, the chevron should be visible for at least 500 feet.
5. Chevrons shall be orange with a black nonreflective legend. Sheeting for the chevron shall be retroreflective Type B_{FL} or Type C_{FL} conforming to Departmental Material Specification DMS-8300, unless noted otherwise. The legend shall meet the requirements of DMS-8300.
6. For Long Term Stationary use on tapers or transitions on freeways and divided highways self-righting chevrons may be used to supplement plastic drums but not to replace plastic drums.

CHEVRONS

GENERAL NOTES

1. Work Zone channelizing devices illustrated on this sheet may be installed in close proximity to traffic and are suitable for use on high or low speed roadways. The Engineer/Inspector shall ensure that spacing and placement is uniform and in accordance with the "Texas Manual on Uniform Traffic Control Devices" (TMUTCD).
2. Channelizing devices shown on this sheet may have a driveable, fixed or portable base. The requirement for self-righting channelizing devices must be specified in the General Notes or other plan sheets.
3. Channelizing devices on self-righting supports should be used in work zone areas where channelizing devices are frequently impacted by errant vehicles or vehicle related wind gusts making alignment of the channelizing devices difficult to maintain. Locations of these devices shall be detailed elsewhere in the plans. These devices shall conform to the TMUTCD and the "Compliant Work Zone Traffic Control Devices List" (CWZTCD).
4. The Contractor shall maintain devices in a clean condition and replace damaged, nonreflective, faded, or broken devices and bases as required by the Engineer/Inspector. The Contractor shall be required to maintain proper device spacing and alignment.
5. Portable bases shall be fabricated from virgin and/or recycled rubber. The portable bases shall weigh a minimum of 30 lbs.
6. Pavement surfaces shall be prepared in a manner that ensures proper bonding between the adhesives, the fixed mount bases and the pavement surface. Adhesives shall be prepared and applied according to the manufacturer's recommendations.
7. The installation and removal of channelizing devices shall not cause detrimental effects to the final pavement surfaces, including pavement surface discoloration or surface integrity. Driveable bases shall not be permitted on final pavement surfaces. The Engineer/Inspector shall approve all application and removal procedures of fixed bases.

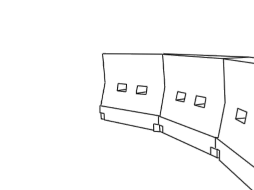

LONGITUDINAL CHANNELIZING DEVICES (LCD)

1. LCDs are crashworthy, lightweight, deformable devices that are highly visible, have good target value and can be connected together. They are not designed to contain or redirect a vehicle on impact.
2. LCDs may be used instead of a line of cones or drums.
3. LCDs shall be placed in accordance to application and installation requirements specific to the device, and used only when shown on the CWZTCD list.
4. LCDs should not be used to provide positive protection for obstacles, pedestrians or workers.
5. LCDs shall be supplemented with retroreflective delineation as required for temporary barriers on BC(7) when placed roughly parallel to the travel lanes.
6. LCDs used as barricades placed perpendicular to traffic should have at least one row of reflective sheeting meeting the requirements for barricade rails as shown on BC(10) placed near the top of the LCD along the full length of the device.

WATER BALLASTED SYSTEMS USED AS BARRIERS

1. Water ballasted systems used as barriers shall not be used solely to channelize road users, but also to protect the work space per the appropriate NCHRP 350 crashworthiness requirements based on roadway speed and barrier application.
2. Water ballasted systems used to channelize vehicular traffic shall be supplemented with retroreflective delineation or channelizing devices to improve daytime/nighttime visibility. They may also be supplemented with pavement markings.
3. Water ballasted systems used as barriers shall be placed in accordance to application and installation requirements specific to the device, and used only when shown on the CWZTCD list.
4. Water ballasted systems used as barriers should not be used for a merging taper except in low speed (less than 45 MPH) urban areas. When used on a taper in a low speed urban area, the taper shall be delineated and the taper length should be designed to optimize road user operations considering the available geometric conditions.
5. When water ballasted systems used as barriers have blunt ends exposed to traffic, they should be attenuated as per manufacturer recommendations or flared to a point outside the clear zone.

If used to channelize pedestrians, longitudinal channelizing devices or water ballasted systems must have a continuous detectable bottom for users of long canes and the top of the unit shall not be less than 32 inches in height.

HOLLOW OR WATER BALLASTED SYSTEMS USED AS LONGITUDINAL CHANNELIZING DEVICES OR BARRIERS

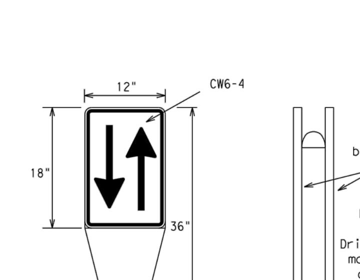

1. Opposing Traffic Lane Dividers (OTLD) are delineation devices designed to convert a normal one-way roadway section to two-way operation. OTLD's are used on temporary centerlines. The upward and downward arrows on the sign's face indicate the direction of traffic on either side of the divider. The base is secured to the pavement with an adhesive or rubber weight to minimize movement caused by a vehicle impact or wind gust.
2. The OTLD may be used in combination with 42" cones or VPs.
3. Spacing between the OTLD shall not exceed 500 feet. 42" cones or VPs placed between the OTLD's should not exceed 100 foot spacing.
4. The OTLD shall be orange with a black non-reflective legend. Sheeting for the OTLD shall be retroreflective Type B_{FL} or Type C_{FL} conforming to Departmental Material Specification DMS-8300, unless noted otherwise. The legend shall meet the requirements of DMS-8300.

OPPOSING TRAFFIC LANE DIVIDERS (OTLD)

Posted Speed *	Formula	Minimum Desirable Taper Lengths **			Suggested Maximum Spacing of Channelizing Devices	
		10' Offset	11' Offset	12' Offset	On a Taper	On a Tangent
30	$L = \frac{WS^2}{60}$	150'	165'	180'	30'	60'
35		205'	225'	245'	35'	70'
40		265'	295'	320'	40'	80'
45	L = WS	450'	495'	540'	45'	90'
50		500'	550'	600'	50'	100'
55		550'	605'	660'	55'	110'
60		600'	660'	720'	60'	120'
65		650'	715'	780'	65'	130'
70		700'	770'	840'	70'	140'
75		750'	825'	900'	75'	150'
80		800'	880'	960'	80'	160'

** Taper lengths have been rounded off.
L=Length of Taper (FT.) W=Width of Offset (FT.)
S=Posted Speed (MPH)

SUGGESTED MAXIMUM SPACING OF CHANNELIZING DEVICES AND MINIMUM DESIRABLE TAPER LENGTHS

SHEET 9 OF 12

Texas Department of Transportation | Traffic Operations Division Standard

BARRICADE AND CONSTRUCTION CHANNELIZING DEVICES

BC(9)-14

FILE: bc-14.dgn	DN: TxDOT	CK: TxDOT	DW: TxDOT	CK: TxDOT
©TxDOT November 2002	CONT	SECT	JOB	HIGHWAY
REVISIONS 9-07 8-14 7-13	DIST	COUNTY		SHEET NO.

103

TYPE 3 BARRICADES

1. Refer to the Compliant Work Zone Traffic Control Devices List (CWZTCD) for details of the Type 3 Barricades and a list of all materials used in the construction of Type 3 Barricades.
2. Type 3 Barricades shall be used at each end of construction projects closed to all traffic.
3. Barricades extending across a roadway should have stripes that slope downward in the direction toward which traffic must turn in detouring. When both right and left turns are provided, the chevron striping may slope downward in both directions from the center of the barricade. Where no turns are provided at a closed road striping should slope downward in both directions toward the center of roadway.
4. Striping of rails, for the right side of the roadway, should slope downward to the left. For the left side of the roadway, striping should slope downward to the right.
5. Identification markings may be shown only on the back of the barricade rails. The maximum height of letters and/or company logos used for identification shall be 1".
6. Barricades shall not be placed parallel to traffic unless an adequate clear zone is provided.
7. Warning lights shall NOT be installed on barricades.
8. Where barricades require the use of weights to keep from turning over, the use of sandbags with dry, cohesionless sand is recommended. The sandbags will be tied shut to keep the sand from spilling and to maintain a constant weight. Sand bags shall not be stacked in a manner that covers any portion of a barricade rails reflective sheeting. Rock, concrete, iron, steel or other solid objects will NOT be permitted. Sandbags should weigh a minimum of 35 lbs and a maximum of 50 lbs. Sandbags shall be made of a durable material that tears upon vehicular impact. Rubber (such as tire inner tubes) shall not be used for sandbags. Sandbags shall only be placed along or upon the base supports of the device and shall not be suspended above ground level or hung with rope, wire, chains or other fasteners.
9. Sheeting for barricades shall be retroreflective Type A conforming to Departmental Material Specification DMS-8300 unless otherwise noted.

Barricades shall NOT be used as a sign support.

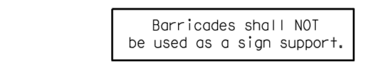

TYPICAL STRIPING DETAIL FOR BARRICADE RAIL

Stiffener may be inside or outside of support, but no more than 2 stiffeners shall be allowed on one barricade.

TYPICAL PANEL DETAIL FOR SKID OR POST TYPE BARRICADES

Each roadway of a divided highway shall be barricaded in the same manner.

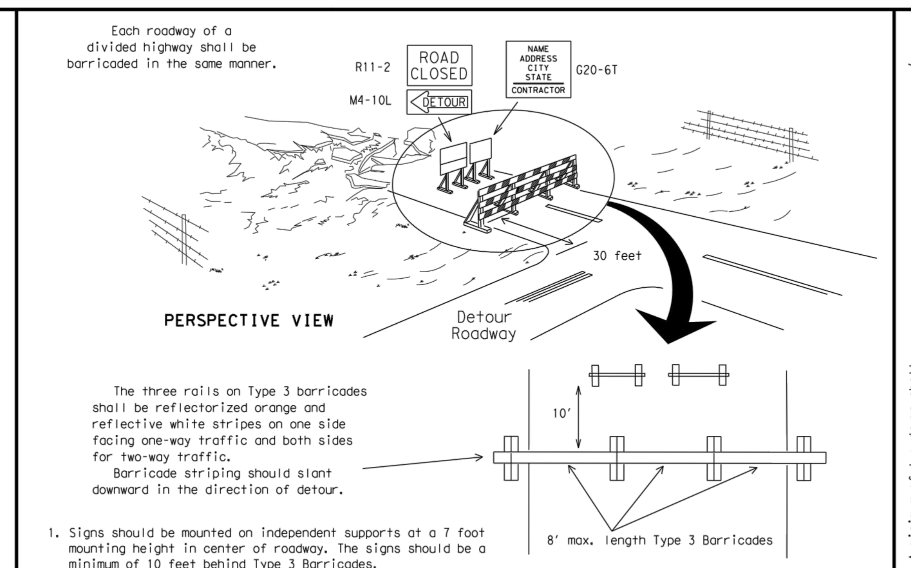

The three rails on Type 3 barricades shall be reflectorized orange and reflective white stripes on one side facing one-way traffic and both sides for two-way traffic.
Barricade striping should slant downward in the direction of detour.

1. Signs should be mounted on independent supports at a 7 foot mounting height in center of roadway. The signs should be a minimum of 10 feet behind Type 3 Barricades.
2. Advance signing shall be as specified elsewhere in the plans.

TYPE 3 BARRICADE (POST AND SKID) TYPICAL APPLICATION

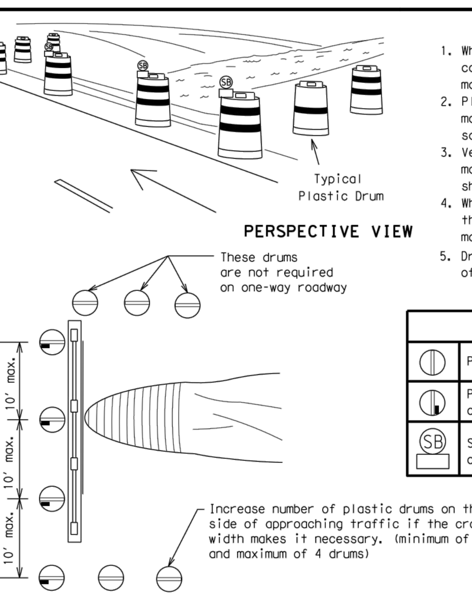

1. Where positive redirectional capability is provided, drums may be omitted.
2. Plastic construction fencing may be used with drums for safety as required in the plans.
3. Vertical Panels on flexible support may be substituted for drums when the shoulder width is less than 4 feet.
4. When the shoulder width is greater than 12 feet, steady-burn lights may be omitted if drums are used.
5. Drums must extend the length of the culvert widening.

LEGEND	
(symbol)	Plastic drum
(symbol)	Plastic drum with steady burn light or yellow warning reflector
SB	Steady burn warning light or yellow warning reflector

CULVERT WIDENING OR OTHER ISOLATED WORK WITHIN THE PROJECT LIMITS

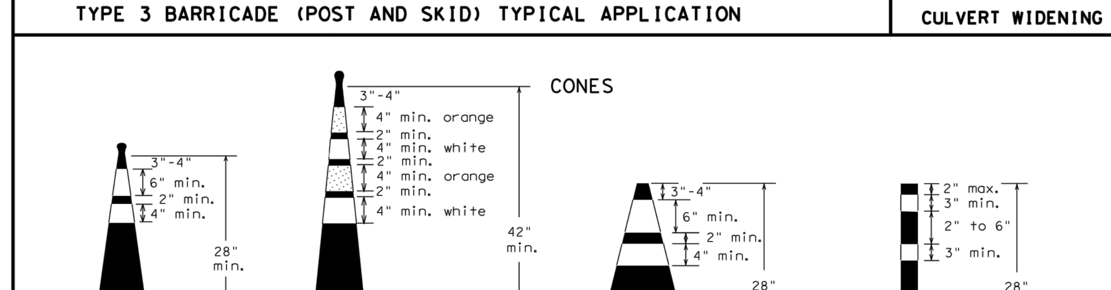

28" Cones shall have a minimum weight of 9 1/2 lbs.

42" 2-piece cones shall have a minimum weight of 30 lbs. including base.

1. Traffic cones and tubular markers shall be predominantly orange, and meet the height and weight requirements shown above.
2. One-piece cones have the body and base of the cone molded in one consolidated unit. Two-piece cones have a cone shaped body and a separate rubber base, or ballast, that is added to keep the device upright and in place.
3. Two-piece cones may have a handle or loop extending up to 8" above the minimum height shown, in order to aid in retrieving the device.
4. Cones or tubular markers used at night shall have white or white and orange reflective bands as shown above. The reflective bands shall have a smooth, sealed outer surface and meet the requirements of Departmental Material Specification DMS-8300 Type A.
5. 28" cones and tubular markers are generally suitable for short duration and short-term stationary work as defined on BC(4). These should not be used for intermediate-term or long-term stationary work unless personnel is on-site to maintain them in their proper upright position.
6. 42" two-piece cones, vertical panels or drums are suitable for all work zone durations.
7. Cones or tubular markers used on each project should be of the same size and shape.

THIS DEVICE SHALL NOT BE USED ON PROJECTS LET AFTER MARCH 2014.

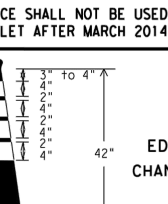

1. This device is intended only for use in place of a vertical panel to channelize traffic by indicating the edge of the travel lane. It is not intended to be used in transitions or tapers.
2. This device shall not be used to separate lanes of traffic (opposing or otherwise) or warn of objects.
3. This device is based on a 42 inch, two-piece cone with an alternate striping pattern: four 4 inch retroreflective bands, with an approximate 2 inch gap between bands. The color of the band should correspond to the color of the edgeline (yellow for left edgeline, white for right edgeline) for which the device is substituted or for which it supplements. The reflectorized bands shall be retroreflective Type A conforming to Departmental Material Specification DMS-8300, unless otherwise noted.
4. The base must weigh a minimum of 30 lbs.

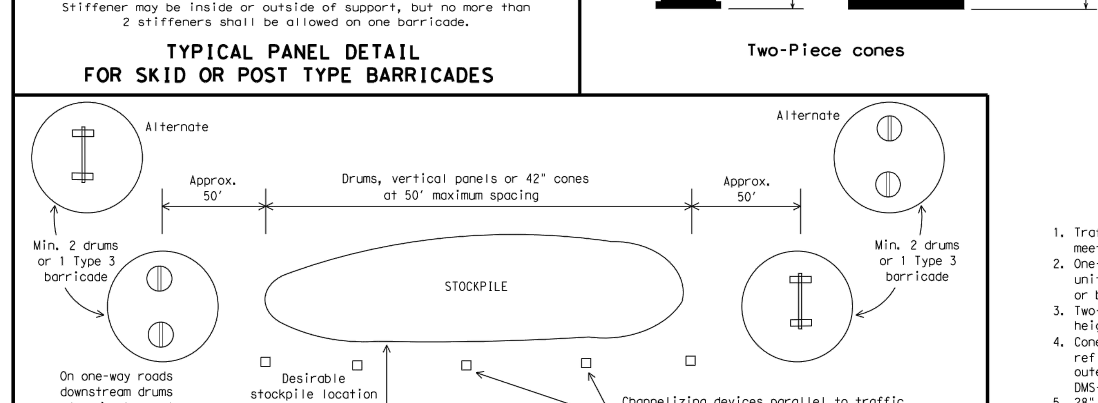

TRAFFIC CONTROL FOR MATERIAL STOCKPILES

SHEET 10 OF 12

Texas Department of Transportation | Traffic Operations Division Standard

BARRICADE AND CONSTRUCTION CHANNELIZING DEVICES

BC(10)-14

FILE: bc-14.dgn	DN: TxDOT	CK: TxDOT	DW: TxDOT	CK: TxDOT
©TxDOT November 2002	CONT	SECT	JOB	HIGHWAY
REVISIONS 9-07 8-14 7-13	DIST	COUNTY		SHEET NO.

104

GENERAL NOTES

1. For long term stationary work zones on freeways, drums shall be used as the primary channelizing device.
2. For intermediate term stationary work zones on freeways, drums should be used as the primary channelizing device but may be replaced in tangent sections by vertical panels, or 42" two-piece cones. In tangent sections one-piece cones may be used with the approval of the Engineer but only if personnel are present on the project at all times to maintain the cones in proper position and location.
3. For short term stationary work zones on freeways, drums are the preferred channelizing device but may be replaced in tapers, transitions and tangent sections by vertical panels, two-piece cones or one-piece cones as approved by the Engineer.
4. Drums and all related items shall comply with the requirements of the current version of the "Texas Manual on Uniform Traffic Control Devices" (TMUTCD) and the "Compliant Work Zone Traffic Control Devices List" (CWZTCD).
5. Drums, bases, and related materials shall exhibit good workmanship and shall be free from objectionable marks or defects that would adversely affect their appearance or serviceability.
6. The Contractor shall have a maximum of 24 hours to replace any plastic drums identified for replacement by the Engineer/Inspector. The replacement device must be an approved device.

GENERAL DESIGN REQUIREMENTS

Pre-qualified plastic drums shall meet the following requirements:

1. Plastic drums shall be a two-piece design; the "body" of the drum shall be the top portion and the "base" shall be the bottom.
2. The body and base shall lock together in such a manner that the body separates from the base when impacted by a vehicle traveling at a speed of 20 MPH or greater but prevents accidental separation due to normal handling and/or air turbulence created by passing vehicles.
3. Plastic drums shall be constructed of lightweight flexible, and deformable materials. The Contractor shall NOT use metal drums or single piece plastic drums as channelization devices or sign supports.
4. Drums shall present a profile that is a minimum of 18 inches in width at the 36 inch height when viewed from any direction. The height of drum unit (body installed on base) shall be a minimum of 36 inches and a maximum of 42 inches.
5. The top of the drum shall have a built-in handle for easy pickup and shall be designed to drain water and not collect debris. The handle shall have a minimum of two widely spaced 9/16 inch diameter holes to allow attachment of a warning light, warning reflector unit or approved compliant sign.
6. The exterior of the drum body shall have a minimum of four alternating orange and white retroreflective circumferential stripes not less than 4 inches nor greater than 8 inches in width. Any non-reflectorized space between any two adjacent stripes shall not exceed 2 inches in width.
7. Bases shall have a maximum width of 36 inches, a maximum height of 4 inches, and a minimum of two footholds of sufficient size to allow base to be held down while separating the drum body from the base.
8. Plastic drums shall be constructed of ultra-violet stabilized, orange, high-density polyethylene (HDPE) or other approved material.
9. Drum body shall have a maximum unballasted weight of 11 lbs.
10. Drum and base shall be marked with manufacturer's name and model number.

RETROREFLECTIVE SHEETING

1. The stripes used on drums shall be constructed of sheeting meeting the color and retroreflectivity requirements of Departmental Materials Specification DMS-8300, "Sign Face Materials." Type A reflective sheeting shall be supplied unless otherwise specified in the plans.
2. The sheeting shall be suitable for use on and shall adhere to the drum surface such that, upon vehicular impact, the sheeting shall remain adhered in-place and exhibit no delaminating, cracking, or loss of retroreflectivity other than that loss due to abrasion of the sheeting surface.

BALLAST

1. Unballasted bases shall be large enough to hold up to 50 lbs. of sand. This base, when filled with the ballast material, should weigh between 35 lbs (minimum) and 50 lbs (maximum). The ballast may be sand in one to three sandbags separate from the base, sand in a sand-filled plastic base, or other ballasting devices as approved by the Engineer. Stacking of sandbags will be allowed, however height of sandbags above pavement surface may not exceed 12 inches.
2. Bases with built-in ballast shall weigh between 40 lbs. and 50 lbs. Built-in ballast can be constructed of an integral crumb rubber base or a solid rubber base.
3. Recycled truck tire sidewalls may be used for ballast on drums approved for this type of ballast on the CWZTCD list.
4. The ballast shall not be heavy objects, water, or any material that would become hazardous to motorists, pedestrians, or workers when the drum is struck by a vehicle.
5. When used in regions susceptible to freezing, drums shall have drainage holes in the bottoms so that water will not collect and freeze becoming a hazard when struck by a vehicle.
6. Ballast shall not be placed on top of drums.
7. Adhesives may be used to secure base of drums to pavement.

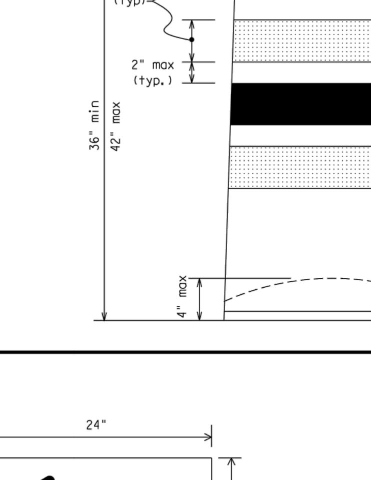

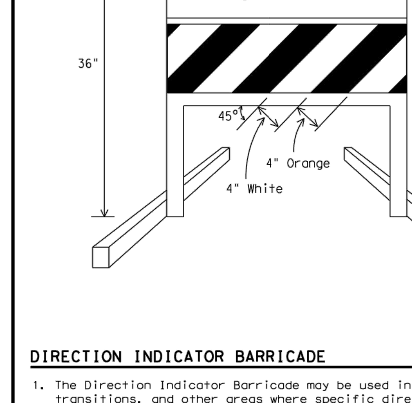

DIRECTION INDICATOR BARRICADE

1. The Direction Indicator Barricade may be used in tapers, transitions, and other areas where specific directional guidance to drivers is necessary.
2. If used, the Direction Indicator Barricade should be used in series to direct the driver through the transition and into the intended travel lane.
3. The Direction Indicator Barricade shall consist of One-Direction Large Arrow (CW1-6) sign in the size shown with a black arrow on a background of Type B_{FL} or Type C_{FL} Orange retroreflective sheeting above a rail with Type A retroreflective sheeting in alternating 4" white and orange stripes sloping downward at an angle of 45 degrees in the direction road users are to pass. Sheeting types shall be as per DMS 8300.
4. Double arrows on the Direction Indicator Barricade will not be allowed.
5. Approved manufacturers are shown on the CWZTCD List. Ballast shall be as approved by the manufacturers instructions.

This detail is not intended for fabrication. See note 3 and the CWZTCD list for providers of approved Detectable Pedestrian Barricades

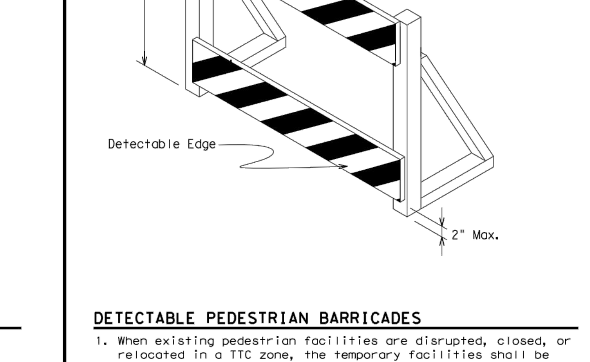

DETECTABLE PEDESTRIAN BARRICADES

1. When existing pedestrian facilities are disrupted, closed, or relocated in a TTC zone, the temporary facilities shall be detectable and include accessibility features consistent with the features present in the existing pedestrian facility.
2. Where pedestrians with visual disabilities normally use the closed sidewalk, a device that is detectable by a person with a visual disability traveling with the aid of a long cane shall be placed across the full width of the closed sidewalk.
3. Detectable pedestrian barricades similar to the one pictured above, longitudinal channelizing devices, some concrete barriers, and wood or chain link fencing with a continuous detectable edging can satisfactorily delineate a pedestrian path.
4. Tape, rope, or plastic chain strung between devices are not detectable, do not comply with the design standards in the "Americans with Disabilities Act Accessibility Guidelines for Buildings and Facilities (ADAAG)" and should not be used as a control for pedestrian movements.
5. Warning lights shall not be attached to detectable pedestrian barricades.
6. Detectable pedestrian barricades may use 8" nominal barricade rails as shown on BC(10) provided that the top rail provides a smooth continuous rail suitable for hand trailing with no splinters, burrs, or sharp edges.

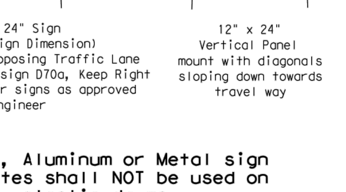

Plywood, Aluminum or Metal sign substrates shall NOT be used on plastic drums

SIGNS, CHEVRONS, AND VERTICAL PANELS MOUNTED ON PLASTIC DRUMS

1. Signs used on plastic drums shall be manufactured using substrates listed on the CWZTCD.
2. Chevrons and other work zone signs with an orange background shall be manufactured with Type B_{FL} or Type C_{FL} Orange sheeting meeting the color and retroreflectivity requirements of DMS-8300, "Sign Face Material," unless otherwise specified in the plans.
3. Vertical Panels shall be manufactured with orange and white sheeting meeting the requirements of DMS-8300 Type A. Diagonal stripes on Vertical Panels shall slope down toward the intended traveled lane.
4. Other sign messages (text or symbolic) may be used as approved by the Engineer. Sign dimensions shall not exceed 18 inches in width or 24 inches in height, except for the R9 series signs discussed in note 8 below.
5. Signs shall be installed using a 1/2 inch bolt (nominal) and nut, two washers, and one locking washer for each connection.
6. Mounting bolts and nuts shall be fully engaged and adequately torqued. Bolts should not extend more than 1/2 inch beyond nuts.
7. Chevrons may be placed on drums on the outside of curves, on merging tapers or on shifting tapers. When used in these locations they may be placed on every drum or spaced not more than on every third drum. A minimum of three (3) should be used at each location called for in the plans.
8. R9-9, R9-10, R9-11 and R9-11a Sidewalk Closed signs which are 24 inches wide may be mounted on plastic drums, with approval of the Engineer.

SHEET 8 OF 12

Texas Department of Transportation | Traffic Operations Division Standard

BARRICADE AND CONSTRUCTION CHANNELIZING DEVICES

BC(8)-14

FILE: bc-14.dgn	DN: TxDOT	CK: TxDOT	DW: TxDOT	CK: TxDOT
©TxDOT November 2002	CONT	SECT	JOB	HIGHWAY
REVISIONS 4-03 7-13 9-07 8-14	DIST	COUNTY		SHEET NO.

102

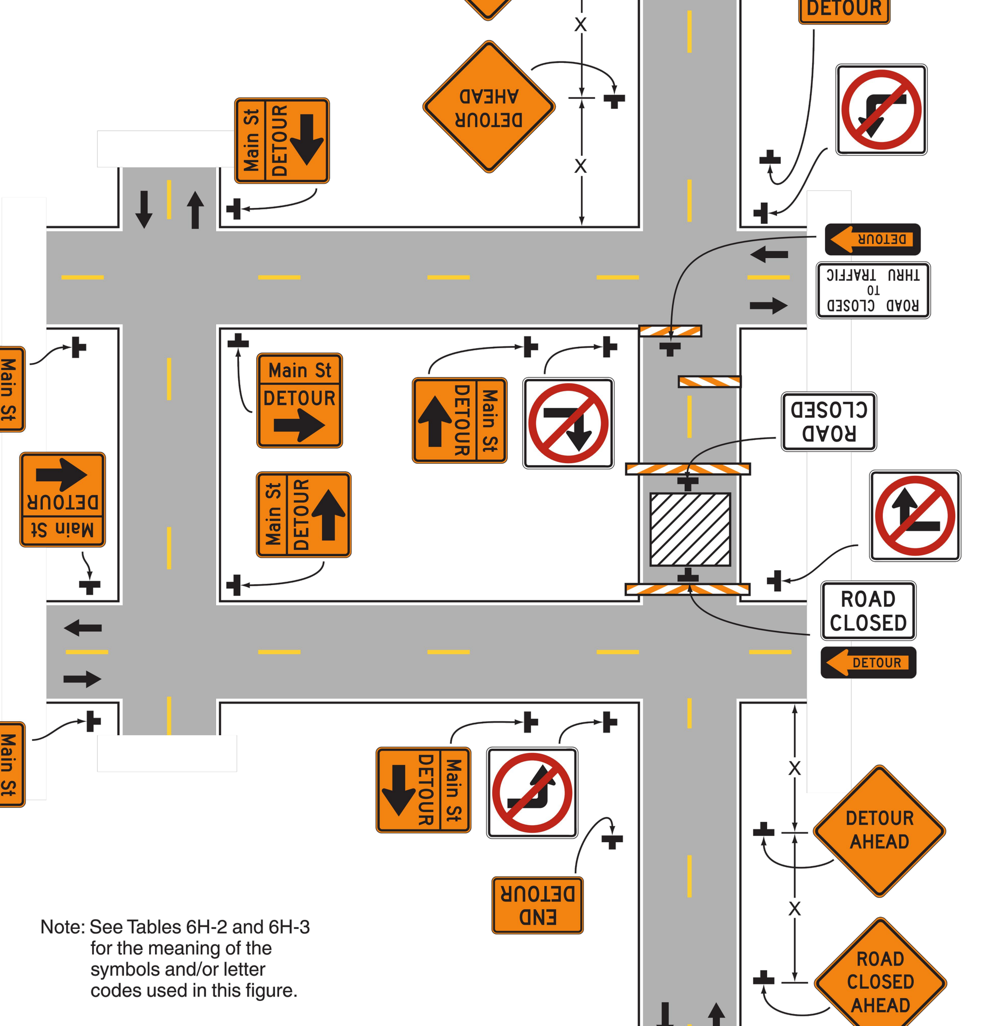

Note: See Tables 6H-2 and 6H-3 for the meaning of the symbols and/or letter codes used in this figure.

Typical Signage for Road Closure

STATE OF TEXAS
11/09/2016
CHRISTOPHER P. FRERICH
119266
LICENSED PROFESSIONAL ENGINEER

ISSUED FOR BIDDING AND CONSTRUCTION.

DATE: 11/09/2016
DRAWN BY: CPF
DESIGNED BY: CPF
CHECKED BY: JDB

REVISIONS

City of Huntsville
COH NO. 12-11-03

McCLURE & BROWNE ENGINEERING/SURVEYING, INC.
Engineer Reg. No. F-458 · Survey Reg. No. 101033-00
1008 Woodcreek Dr., Suite 103
College Station, Tx. 77845 · (979) 693-3838

M&B
MBESI No. 10250020

Traffic Control Details

Sam Houston Avenue Waterline Replacement

SHEET NO.

C4.4

10250022-002-C4.3
100% COMPLETE