CONTRACT DOCUMENTS

FOR

Sam Houston Ave
Waterline Replacement

FOR THE

CITY OF HUNTSVILLE
WALKER COUNTY, TEXAS

November 2016

COH No. 12-11-03
MBESI No. 10250022

STATE OF TEXAS
11/30 2016
CHRISTOPHER P. FRERICH
119266
LICENSED
PROFESSIONAL ENGINEER

Issued for Bidding & Construction

McCLURE & BROWNE ENGINEERING/SURVEYING, INC.
1008 Woodcreek Dr., Suite 103 · College Station, Tx. 77845 · (979) 693-3838
Engineer Reg. No. F-458
Survey Reg. No. 101033-00

This page intentionally left blank

CONTRACT DOCUMENTS

FOR

Sam Houston Avenue
Waterline Replacement

FOR THE

CITY OF HUNTSVILLE
WALKER COUNTY, TEXAS

December 2016

COH No. 12-11-03
MBESI No. 10250022

ISSUED FOR BIDDING AND CONSTRUCTION

CITY OFFICIALS

Mayor .....Andy Brauninger
Mayor Pro Tem .....Keith D. Olson
Council Members .....Joe Emmett
.....Tish Humphrey
.....Ronald Allen
.....Joe Rodriguez
.....Paul Davidhizar
.....Tyler McCaffety
.....Clyde Loll

City Manager .....Matt Benoit
City Engineer .....Y. S. Ramachandra, P.E.

This page was intentionally left blank.

TABLE OF CONTENTS

Description	Section Number	Total Pages per Section
Title Page	00001	2
Table of Contents	00005	2
Request for Competitive Sealed Proposals	00011	1
Special Instructions for Competitive Sealed Proposals	00101	12
Technical Proposal	00301	12
Bid Bond	00410	2
Notice of Award	00510	2
Agreement	00520	2
Corporate Resolution	00530	2
Construction Performance Bond	00610	2
Construction Payment Bond	00620	2
Texas Ethics Commission Form 1295	00640	4
General Conditions	00700	68
Required General Contract Conditions	00750	2
Supplemental Conditions	00800	16
Wage Determination Rates	00850	6
Trench Safety – Federal Register	00900	40

TECHNICAL SPECIFICATIONS

Description

DIVISION 1 - GENERAL REQUIREMENTS
DIVISION 2 – SITEWORK

This page was intentionally left blank.

REQUEST FOR COMPETITIVE SEALED PROPOSALS

COMPETATIVE SEALED PROPOSALS, addressed to the Mayor and Council of the City of Huntsville, Texas, will be received at the office of the City Secretary, City Hall, 1212 Avenue M, Huntsville, Texas, until 3:00 p.m. Central Time, December 22, 2016 for the purpose of furnishing all supervision, materials, equipment and the performing of all work required in the construction of the Sam Houston Avenue Waterline Replacement that includes:

1. ±5,420 LF of 12" Waterline, by open cut & directional bore.
2. ±48 Water Service Lines and associated appurtenance.
3. ±240 LF of Directional Boring.
4. ±50 LF of 20" Steel Encasement.

and other improvements incidental thereto, at which time and place the proposals will be publicly opened and read aloud and retained for tabulation, checking and evaluation.

PROPOSALS shall be submitted in sealed envelopes upon the blank form furnished herewith. Sealed envelopes shall be marked: "Competitive Sealed Proposal for Project #12-11-03, Sam Houston Avenue Waterline Replacement". Do not open until 3:00 p.m. Central Time, Thursday December 22, 2016.

PRE-PROPOSAL CONFERENCE – A NON-MANDATORY pre-proposal conference will be held at 10:00 a.m. December 13, 2016 at the City of Huntsville Service Center, Public Works Conference Room (2nd Floor) at 448 State Highway 75 North, Huntsville, Texas, 77320.

PLANS AND SPECIFICATIONS and contract documents may be examined without charge at the following locations:

City Engineer's Office, City Service Center, 448 Highway 75 North, Huntsville, Texas
Tel: (936) 294-5794

McClure & Browne Engineering/Surveying, Inc., 1008 Woodcreek Drive, Suite 103, College Station, Texas, Tel: (979) 693-3838

A digital copy in PDF format of all contract documents may be downloaded from "Bids and RFPs" section of the City of Huntsville website (http://www.huntsvilletx.gov). Hard copies of the contract documents may be obtained from the office of the Purchasing Manager located at the City Service Center, 450 Highway 75 North, Huntsville, Texas.

In case of ambiguity or lack of clearness in stating proposal prices, or in the event of any informality in the bids, the Owner reserves the right to adopt the most advantageous construction thereof, or to reject any or all proposals.

Time for beginning and completing the work shall as specified by the Contractor in the proposal, measured from the date given in the "NOTICE TO PROCEED".

December 1, 2016
Date

Lee Woodward, City Secretary

Legal Ad Dates:
Sunday, December 4, 2016
Sunday, December 11, 2016

This page intentionally left blank

SPECIAL INSTRUCTIONS FOR COMPETITIVE SEALED PROPOSALS

1. INTRODUCTION

The City of Huntsville requests Competitive Sealed Proposals (CSPs) for construction of SAM HOUSTON AVENUE WATERLINE RELOCATION in accordance with Local Government Code Chapter 252. The City of Huntsville is aware of the time and effort you expend in preparing and submitting bids and proposals to the City. Please let us know of any proposal requirements which are causing you difficulty in responding to our requests. We want to make the process as easy and painless as possible so that all responsible vendors can compete for the City's business. Information on which commodities and services we purchase or have for sale is available from the Purchasing Office. You may register on the City's vendor management program at www.proposalsync.com to receive notice of proposal postings.

2. RECEIPT OF PROPOSALS

2.1. Competitive Sealed Proposals shall be delivered to Attention of City Secretary, City of Huntsville 1212 Avenue M, Huntsville, TX 77340. Responders must include one (1) completed original proposal and one (1) certified copy of proposal.

2.2. Proposals will be received at the time set forth in the paragraph 6.1.

2.3. Proposal documents are obtainable from the Architect/Engineer (A/E) under conditions set forth in the Request for CSP.

3. INFORMATION INQUIRIES

3.1. Information inquiries regarding the CSP process shall be directed to in writing to

3.2. All Information inquiries regarding the Drawings, Specifications, and the Competitive Sealed Proposals (CSP) method of procurement should be directed to Billie F. Smith, Purchasing Manager 936-291-5495 or e-mail bsmith@huntsvilletx.gov using the Question/Response Form in this section. Mrs. Smith will then redirect any questions regarding the technical aspects of the Drawings and Specifications to McClure & Browne Engineering/Surveying Inc.

4. DISCREPANCIES, INTERPRETATIONS, AND ADDENDA

4.1. Proposer must notify Purchasing Manager in writing, at least five (5) business days prior to the scheduled Proposal opening date, if discrepancies, ambiguities or omissions are found in the Proposal documents, or if further information or interpretation is desired. Purchasing Manager will forward all inquiries to Engineer to provide corrections or clarifications by Addenda. Purchasing Manager will post Addenda and distribute Addenda to known Request for CSP holders list.

4.2. Answers to inquires will be provided in writing to all Proposers in addenda form. All provisions and requirements of such addenda will supersede or modify affected portions of the Proposal documents. All addenda will be incorporated into and bound with the Contract Documents. No other explanation or interpretation will be considered binding.

5. PROPOSAL DOCUMENTS

5.1. Drawings and Specifications have been prepared by the Civil Engineering firm of McClure & Browne Engineering/Surveying Inc. (MBESI), 1008 Woodcreek Dr., Suite 103, College Station, Texas 77845. Documents include Drawings dated December 18, 2015 and Contract Documents dated December 18, 2015.

5.2. Bid documents in PDF format can be obtained from MBESI by emailing a request for the download link to bids@mcclurebrowne.com. The request for a download link must include the company name of the proposer, business address, contact person name, telephone number and email address. This includes instruction to bidders, bidding forms, specifications, drawings, and all other pertinent information at no charge. These same documents will also be available at the various plan rooms throughout the area.

6. REQUIRED SUBMITTALS & DEADLINES

6.1. The Proposed CSP Schedule shall be:

Request for CSP .....December 4, 2016
Pre-Proposal Conference .....December 13 2016
Deadline for Submission of Questions (Close of Business).....December 16, 2016
Deadline for Response to Questions (Close of Business).....December 20, 2016
Deadline for Receiving Proposals .....December 22, 2016
Notification of Award .....Anticipated February 2017

6.2. A MANDATORY pre-proposal conference will occur at will be held at 10:00 a.m., December 13, 2016 at the City of Huntsville Service Center, Public Works Conference Room (2nd Floor) at 448 State Highway 75 North, Huntsville, Texas 77320. All general contractors planning to submit a proposal are REQUIRED to attend. Subcontracts are encouraged to also attend.

6.3. **Submit the completed proposal in 9”x12” sealed envelope. The outside of the envelope shall include information to identify the Project and the Proposer. Responders must include one (1) completed original CSP and one (1) certified copy of the CSP.**

6.4. The following items shall comprise a complete Competitive Sealed Proposal.

6.4.1. Section 00101 – Special Instructions For Competitive Sealed Proposals, Conflict of Interest Questionnaire

6.4.2. Section 00101 – Special Instructions For Competitive Sealed Proposals, Non-Collusion Affidavit

6.4.3. Section 00301 – Technical Proposal

6.4.4. Section 00410 – Bid Bond

6.4.5. Section 00101 – Special Instructions For Competitive Sealed Proposals, Question/Response Form (if applicable).

6.4.6. Section 00101 – Special Instructions For Competitive Sealed Proposals, No-Response Form (only if not submitting a full CSP)

6.5. The Proposer must sign the proposal in the space provided in Section 00301.

6.5.1. If the proposal is submitted by a partnership or corporation, the name and address of the partnership or corporation must be shown, together with the name and address of the partners or corporate officers.

6.5.2. If the proposal is submitted by a partnership, it must be signed by one of the partners. proposals submitted by a corporation must be signed by one of the corporate officials having, under the corporate structure, the power to act in this capacity and the corporate seal must be affixed onto the proposal.

6.5.3. If the proposal is submitted by a sole proprietorship, it must be signed by the proprietor.

6.6. If the Proposal is submitted by mail, it is the responsibility of the Proposer to ensure delivery of all Proposal parts prior to the advertised time set for the Proposal receipt.

6.7. FAILURE TO SUBMIT A COMPLETE PROPOSAL WILL BE VIEWED BY THE OWNER AS A NON-RESPONSIVE PROPOSAL WHICH WILL BE REJECTED.

7. PREPARATION OF COMPETITIVE SEALED PROPOSAL

7.1. The Proposal must be based on conditions at the project site, the project Drawings and Specifications and any addenda issued.

7.2. Proposals must include the completed Proposal Form, sample copies of which are bound into the Project Manual. All blanks must be completed and the Proposals must be dated and signed.

7.3. Section 00301 - Technical Proposal must be completed in full, authoritatively executed in blue ink, and submitted on the Proposal form furnished in the proposal packet.

7.3.1. Proposal showing omissions, alterations, conditions, or carrying riders or other qualifiers which modify the Proposal form may be rejected as irregular.

7.3.2. If the Proposer chooses to issue a "No Response" (N/R) to any question on the Proposal, an explanation of this action is required. Failure to do so, may be viewed by the Owner as an incomplete response and may subject the entire Proposal to rejection.

7.4. If Part II – Proposers Qualifications form does not provide sufficient space to adequately respond to a question, the Proposer should attach additional 8 1/2" X 11" white paper sheets as required, referencing the page and question numbers to which the response pertains.

7.5. The Proposer may modify Part 1 of the Technical Proposal by means of a facsimile communication using company letterhead and executed by a company officer provided such communication is received prior to the advertised time set for the receipt of Proposals in the published Request for CSP. The communication must not reveal the Proposal price but should identify the addition or subtraction or other modification(s) so that the final prices will not be known until the sealed Proposal is opened. If original written confirmation is not received within two (2) working days after the due date of the Proposal, the Proposal modification will be ignored and the total Proposal may be rejected.

7.6. Proposals received after the advertised time for the Proposal receipt will be ineligible and will be returned unopened.

7.7. A Proposer will receive no compensation or reimbursement of expenses incurred in of the preparation of a Competitive Sealed Proposal submission.

7.8. The Owner reserves the right to reject any or all Proposals.

8. PUBLIC INFORMATION AND NOTICE OF CONFIDENTIALITY

8.1. The Owner considers all Proposal information, documentation and supporting materials submitted in response to this Request for CSP to be non-confidential and/or non-proprietary in nature, and therefore, shall be subject to the public disclosure under the Texas Public Information Act (Texas Government Code, Sec. 552.001, et seq.) after the award of the contract.

8.2. The Proposer must identify and designate those portions of their technical Proposal which contains trade secrets or other proprietary data. If the Proposal includes such data, the Proposer shall:

8.2.1. Mark the cover sheet of the Technical Proposal with the following phrase: "This Proposal includes data that shall not be disclosed outside The City and the Engineer and shall not be duplicated, used or disclosed in whole or in part for any purpose other than to evaluate this Proposal."

8.3. Mark each sheet and the specific data on that sheet that the Proposer wishes to restrict with the following phrase: "Use or disclosure of this specifically marked data is subject to the restrictions regarding confidentiality cited on the cover sheet of this Proposal."

9. PRE-QUALIFICATION OF PROPOSER

9.1. The Owner, at its option, may elect to pre-qualify Proposers. If pre-qualification is to be accomplished, Proposers will be required to submit all or specific parts of the information required by the Request for CSP with the exception of pricing information. Pre-qualification may not be a conclusive determination that a Proposer offers the best value to the Owner.

9.2. A pre-qualified Proposal may be rejected on the basis of subsequently discovered information, but failure to pre-qualify does not prevent a subsequent determination that a Proposer offers the best value to the Owner regarding a specific proposal.

9.3. For this project, pre-qualification of Proposers is not required.

10. REQUIREMENTS OF PROPOSERS

10.1. Out of state corporate Proposers must submit a Certificate of Good Standing or a Certificate of Authority with their Proposal. This certificate may be applied for through the office of the Texas Secretary of State.

10.2. Not less than the prevailing wage rates as hereinafter set forth in the CONTRACT DOCUMENTS, which are made a part hereof, must be paid on this project per Texas Government Code Chapter 2258.

10.3. All applicable State laws, municipal ordinances, and the rules and regulations of all

authorities having jurisdiction over construction of the project shall apply to the contract throughout, and they will be deemed to be included in the contract the same as though herein written out in full.

10.4. Safety Standards and Accident Prevention:

10.4.1. With respect to all work performed under this contract, the Contractor shall:

10.4.1.1. Comply with the safety standards provisions of applicable laws, building and construction codes and the "Manual of Accident Prevention in Construction" published by the Associated General Contractor's of America, the requirements of the Occupational Safety and Health Act of 1970 (Public Law 91-596), and the requirements of Title 29 of the Code of Federal Regulations, Section 1518 as published in the "Federal Register", Volume 36 No. 75, Saturday, April 17, 1971.

10.4.1.2. Exercise every precaution at all times for the prevention of accidents and the protection of persons (including employees) and property.

10.4.1.3. Maintain at his office or other well known place at the job site, all articles necessary for giving first aid to the injured, and shall make standing arrangements for the immediate removal to a hospital or a doctor's care of persons (including employees), who may be injured on the job site. In no case shall employees be permitted to work at a job site before the employer has made a standing arrangement for removal of injured persons to a hospital or a doctor's care.

11. OWNERSHIP OF THE COMPETITIVE SEALED PROPOSAL

11.1. Submitted Proposals, documentation and supporting materials shall become the property of the Owner.

12. SITE INVESTIGATION

12.1. It is the responsibility of each Proposer to examine the project site, existing improvements and adjacent property and be familiar with existing conditions before submission of a Proposal.

12.2. After investigating the project site and comparing the Drawings and Specifications with the existing conditions, the Proposer should immediately notify the A/E, in accordance with paragraph 4.0 of these Instructions for Competitive Sealed Proposals, of any conditions for which requirements are not clear; or about which there is any question regarding the extent of the Work involved.

12.3. Should the successful Proposer fail to make the required investigation and should a question arise after award of contract as to the extent of the Work involved in any particular case, after receiving recommendations from the A/E, the Owner will make the interpretation of the Contract Documents.

13. EVALUATION AND CONTRACT AWARD PROCESS

13.1. Proposals will be publicly announced as Pass/Fail only. Contents of the Proposals will be

afforded security sufficient to preclude disclosure of the contents prior to award or rejection action.

13.2. Proposals will be evaluated by the City and Engineer. The criteria for evaluation and selection of the successful Proposer for this award, will be based upon the factors listed below:

13.2.1. Cost of Construction: 45%

13.2.2. Previous Related Experience and qualifications of staff: 30%

13.2.3. Project Schedule: 15%

13.2.4. Financial Stability: 5%

13.2.5. Cost of Reduction: 5%

13.2.6. Total: 100%

13.3. After opening the Proposals, the Owner will evaluate and rank each Proposal with respect to the published selection criteria described under Section 13.2. After opening and ranking, an award may be made on the basis of the initially submitted Proposal, without discussion, clarification or modification, or the Owner may discuss with the selected Proposer, offers for cost adjustment and other elements of the Proposal. Other than the data read at the time Proposals are due, the Owner shall not disclose any information derived from the Proposals submitted by competing firms in conducting such discussions.

13.4. If the Owner determines that it is unable to reach a satisfactory agreement with the first ranked Proposer, the Owner will terminate discussions with that Proposer. The Owner will then proceed with negotiations with each successive Proposer as they appear in the order of ranking until an agreement is reached, or until the Owner has rejected all Proposals.

13.5. Immediately following the Owner's approval of the order of ranking of Proposers and the Owner's contract award or Proposal rejection action, the Proposers will be notified by electronic mail or facsimile message.

13.6. The Owner reserves the right to accept or reject any or all alternates or to accept any combination of alternates considered advantageous to the Owner.

13.7. The award or rejection action regarding this Proposal is at the sole discretion of the Owner and the Owner makes no warranty regarding this Proposal that a contract will be awarded to any Proposer.

13.8. The Owner agrees that if the Contract is awarded, it will be awarded to the Proposer offering the best value to the Owner. The Owner is not bound to accept the lowest priced Proposal if that Proposal is judged not to be the best value for the Owner, as determined by the Owner.

14. PROPOSAL SECURITY

14.1. A CASHIER'S CHECK, certified check or acceptable bid bond made payable to the City of Huntsville, Texas in an amount of 5% of the total identified in Part 1 of Section 00300 - Technical Proposal must accompany each proposal as a guarantee that if awarded the contract, the Proposer will enter into a contract and execute such bonds as are required within ten (10) days of award of contract of City Council.

14.2. All proposal securities will be returned to the respective Proposers within thirty (30) days after proposals are opened, except those which the CITY elects to hold until the successful Proposer has executed the contract. Thereafter all remaining securities, including security of the successful Proposer, will be returned.

14.3. Attorneys-in-fact who sign proposal bonds must file with each bond a certified and effectively dated copy of their power of attorney.

15. CONTRACT SECURITY

15.1. If the total proposal (including all alternates) is less than $50,000, the contract is not required to provide a payment or performance bond.

15.2. If the total proposal (including all alternates) is more than $100,000, then a performance bond is required if the contract provides that payment is not due to the Contractor until the work is completed and accepted by the City. The Contractor must elect in writing whether the job is to be turnkey or bonded in the contract documents.

15.3. If the total proposal (including all alternates) is more than $50,000, then a payment bond is required if the contract provides that payment is not due to the Contractor until the work is completed and accepted by the City. The Contractor must elect in writing whether the job is to be turnkey or bonded in the contract documents.

15.4. For all contracts over $25,000 where the Contractor does not elect to do the work on a turnkey basis, and for all contracts over $100,000, the successful Proposer shall furnish to the City performance and payment bonds in accordance with State law. (Texas Government Code Chapter 2253; Texas Local Government Code section 271.059. Texas Local Government Code section 252.044)

This area was intentionally left blank.

CONFLICT OF INTEREST QUESTIONNAIRE

FORM CIQ

For vendor or other person doing business with local governmental entity

This questionnaire reflects changes made to the law by H.B. 1491, 80th Leg., Regular Session.

This questionnaire is being filed in accordance with Chapter 176, Local Government Code by a person who has a business relationship as defined by Section 176.001(1-a) with a local governmental entity and the person meets requirements under Section 176.006(a).

By law this questionnaire must be filed with the records administrator of the local governmental entity not later than the 7th business day after the date the person becomes aware of facts that require the statement to be filed. *See* Section 176.006, Local Government Code.

A person commits an offense if the person knowingly violates Section 176.006, Local Government Code. An offense under this section is a Class C misdemeanor.

OFFICE USE ONLY

Date Received

1 **Name of person who has a business relationship with local governmental entity.**

2 ☐ **Check this box if you are filing an update to a previously filed questionnaire.**

(The law requires that you file an updated completed questionnaire with the appropriate filing authority not later than the 7th business day after the date the originally filed questionnaire becomes incomplete or inaccurate.)

3 **Name of local government officer with whom filer has employment or business relationship.**

_____
Name of Officer

This section (item 3 including subparts A, B, C & D) must be completed for each officer with whom the filer has an employment or other business relationship as defined by Section 176.001(1-a), Local Government Code. Attach additional pages to this Form CIQ as necessary.

A. Is the local government officer named in this section receiving or likely to receive taxable income, other than investment income, from the filer of the questionnaire?

☐ Yes ☐ No

B. Is the filer of the questionnaire receiving or likely to receive taxable income, other than investment income, from or at the direction of the local government officer named in this section AND the taxable income is not received from the local governmental entity?

☐ Yes ☐ No

C. Is the filer of this questionnaire employed by a corporation or other business entity with respect to which the local government officer serves as an officer or director, or holds an ownership of 10 percent or more?

☐ Yes ☐ No

D. Describe each employment or business relationship with the local government officer named in this section.

4

_____ _____
Signature of person doing business with the governmental entity Date

Adopted 06/29/2007

Non-Collusion Affidavit

State of _____

County of _____

_____, being first duly sworn, deposes and says that:

1. He/she is _____of_____, the responder that has submitted the attached bid;

2. He/she is fully informed respecting the preparation of contents of the attached bid and of all pertinent circumstances respecting such bid;

3. Such bid is genuine and is not collusive or a sham bid;

4. Neither the said responder not any of its officer, partners, owners, agents, representative, employees or parties in interest, including this affidavit, has in any way colluded, conspired, connived or agreed, directly or indirectly with another responder, firm or person to submit a collusive or sham bid in connection with the contract for which the attached bid has been submitted or to refrain from responding in connection with such contract, or has in any manner, directly or indirectly, sought by agreement of collusion or communication or conference with any other responder, firm or person to fix the price or prices in the attached bid or of any other responder, of to fix an overhead, profit or cost element of the bid price of the bid price of any other responder, or to secure through any collusion, conspiracy, connivance of unlawful agreement any advantage again the City of Huntsville or any per interest in the proposed contact.

5. In compliance with the specifications in the bid and quote conditions, I, the undersigned agree to furnish the services upon which prices are offered at the price opposite to each line description to the City of Huntsville within the time specified. By submitting this bid/proposal and attached signature I hereby attest that I have not received nor offered anything of value to any City employee, official, and/or board member in connection with this submitted bid.

6. Advanced disclosures of any information to any particular/potential responder which gives that particular/potential responder any advantage over any other interested responder in advance of the award whether in response to advertising or an informal request for bids or proposals, made or permitted by a member of the governing body or an employee or representative thereof, will cause to void that particular responders bid or proposal. Prior to an award any communication with a member of the selection committee or governing board will cause to void that particular responders bid or proposal and the committee member or the governing board member will be rejected from the voting process for that bid or proposal. By submission of this bid or proposal responder attests that no improper communication has occurred resulting in an advantage over any other responder, potential responder, or advance discloser.

7. The price or prices quoted in the attached bid are fair and proper and are not tainted by any collusion, conspiracy, connivance or unlawful agreement on the part of the responder or any of its agents, representative, owners, employees, or parties in interest, including this affidavit.

_____
Signature

_____
Printed Name

Subscribe and sworn to me this_____
day of_____, 2014

By_____
Notary Public
My commission expires_____

No Response Statement

Project Name: _____

Project Number: _____

Responders Name:_____

The City of Huntsville seeks to evaluate the level of competitiveness provided. Please complete this form only if you are not submitting a quote.

Please check the appropriate boxes indicating the factors considered for not bidding.

- ☐ Unable to respond to the request for bid or request for proposals by the specific deadline.
- ☐ Our company does not carry or cannot offer this type of product and service.
- ☐ Specifications are restrictive, unclear or incomplete. Please explain below

  _____

  _____
- ☐ Invitation is suitable, but engaged in other work.
- ☐ Do not wish to do business with the City.

The purpose of this form is to achieve a maximum participation in the bidding process. Vendor comments are not restrictive to the above described. Please make any statement that may have impacted your ability to bid.

_____

_____

Question/Response Form

Responders are encouraged to ask questions to gain clarification. Only questions submitted in writing and addressed to the City of Huntsville Purchasing Department will be answered. Responders are asked to use this form for questions. The Purchasing Department will gain a response and reply via e-mail and all questions with responses may be posted on the City of Huntsville website. All responders are encouraged to check the website under FAQ prior to posting a question. Any question received after 72 hours from bid opening may not be answered.

Please only use one question per form. For additional questions please use another form.

Responders Name:_____

Responses will be sent either fax or e-mail:

Responders Fax #:_____

Responders E-mail address:_____

Question:_____

_____

_____

This page was intentionally left blank.

_____

_____

Response:_____

_____

_____

_____

_____

_____

This page was intentionally left blank.

TECHNICAL PROPOSAL

COMPETITIVE SEALED PROPOSAL

_____

(Company Name)

_____

(Address)

_____

(City/State/Zip Code)

_____ _____

(Phone) **(Fax)**

For

Sam Houston Avenue Waterline Replacement Improvements

City of Huntsville

Project No. 12-11-03

Proposal of:_____

COMPETITIVE SEALED PROPOSAL
to
CITY OF HUNTSVILLE

FOR THE FOLLOWING WORK

The undersigned, as a designated representative for the proposer, declares such firm is the only entity, as principal, with any interest in this proposal and the Proposal is made without collusion with any other entity. The proposer affirms that the form of Contract, Instructions for Competitive Sealed Proposals, Specifications and the Drawings pertaining to this Proposal have been examined and the firm has also examined the locations, conditions and classes of materials for the proposed Work and agrees to provide all necessary machinery, tools, apparatus and construction means to accomplish the Work described in the Contract Documents in the manner prescribed.

The proposer agrees the quantities of Work to be performed and materials to be furnished may be increased or decreased as may be considered necessary, in the sole opinion of the Owner's Representative, to complete the Work as planned and contemplated. Adjustment for changes in Work will be in accordance with the Uniform General Conditions.

Proposal amounts must be shown in both works and figures. In case of discrepancy, the amount shown in

words will govern. The proposer acknowledges receipt and incorporation into this bid of the following

addenda:

No.	Date	Contractor Initials	No.	Date	Contractor Initials
1	_____	_____	6	_____	_____
2	_____	_____	7	_____	_____
3	_____	_____	8	_____	_____
4	_____	_____	9	_____	_____
5	_____	_____	10	_____	_____

Is proposer a corporation (Check One): Yes_____No_____If proposer is a Corporation, a "Certificate of Good Standing" issued by the Texas Comptroller of Public Accounts must be submitted with the Proposal.

A "nonresident proposer" is equivalent to a "nonresident bidder," and a "Texas Resident Proposer" is equivalent to a "Texas Resident Bidder," as defined hereafter and may be awarded a Contract in accordance with Chapter 2252, Texas Government Code, as partially quoted below.

"...Section (2) "Nonresident bidder" means a bidder whose principal place of business is not in this state, but excludes a contractor whose ultimate parent company or majority owner has its principal place of business in this state.

(3) "Texas resident bidder" means a bidder whose principal place of business is in this state, and includes a contractor whose ultimate parent company or majority owner has its principal place of business in this state.

In the space below, enter the address of the bidder's principal place of business and if applicable, the name and address of the bidder's ultimate parent company or majority owner.

Bidder's name and address of principal place of business:_____

Ultimate parent company or majority owner's name and address of principal place of business: _____

PART 1: CONTRACT PRICE AND SCHEDULE

The work will consist of:

- ±740 LF of 16" Waterline, ±7,220 LF of 12" Waterline, & ±250 LF of 6" Waterline by open cut, dry bore, & directional bore.
- ±34 Water Service Lines and associated appurtenance.
- ±1,350 LF of Directional Boring.
- ±140 LF of Dry Boring with Steel Encasement., and utility infrastructure improvements.

BASE PROPOSAL AMOUNT:

Total amount for the furnishing of all labor, materials, services, equipment and appliances required in conjunction with and properly incidental to all work identified as "Base Bid" (SCOPE, not including work listed as alternates) in conformance with Drawings and Specifications prepared by McClure & Browne Engineering and Surveying Inc.

_____	_____
(Amount in words)	(Amount in Numerals)

BASE BID UNIT PRICE BREAKDOWN:

The Contractor shall fill out the following Base Bid Unit Price Breakdown. If the Contractor is awarded the construction contract; the Base Bid Unit Price Breakdown shall be used for contract quantity adjustments.

Sam Houston Avenue Waterline Replacement
TECHNICAL PROPOSAL PART 1 – BASE BID UNIT COST BREAKDOWN
COH No. 12-11-03 – MBESI No. 10250022

Item No.	Description	Units	Est. Qty.	Unit Price	Amount	Amount in Written Words
1.00 Site Preparation						
1.01	Mobilization	LS	1	$	$	$ _____ And _____/100ths Dollars
1.02	Traffic Control	LS	1	$	$	$ _____ And _____/100ths Dollars
1.03	Demolish Exist. Waterline	LF	1,631	$	$	$ _____ And _____/100ths Dollars
1.04	Grout-Fill & Abandon Existing Waterline	LF	4,190	$	$	$ _____ And _____/100ths Dollars
1.05	Demolish Existing Fire Hydrant	EA	7	$	$	$ _____ And _____/100ths Dollars
				Subtotal Site Preparation:	$	$ _____ And _____/100ths Dollars
2.00 Water Line Replacement						
2.01	12" AWWA C900, CL 235, PVC Water Line by directional bore	LF	236	$	$	$ _____ And _____/100ths Dollars

Sam Houston Avenue Waterline Replacement
TECHNICAL PROPOSAL PART 1 – BASE BID UNIT COST BREAKDOWN
COH No. 12-11-03 – MBESI No. 10250022

Item No.	Description	Units	Est. Qty.	Unit Price	Amount	Amount in Written Words
2.02	12" AWWA C900, CL 235, PVC Water Line With Structural Backfill, by Open Cut	LF	5,071	$	$	$ _____ And _____/100ths Dollars
2.03	12” AWWA C150, CL235, D.I. Water Line With Structural Backfill, by Open Cut	LF	115	$	$	$ _____ And _____/100ths Dollars
2.04	8" AWWA C900, CL 235, PVC Water Line With Structural Backfill, by Open Cut	LF	38	$	$	$ _____ And _____/100ths Dollars
2.05	6" AWWA C900, CL 235, PVC Water Line With Structural Backfill, by Open Cut	LF	28	$	$	$ _____ And _____/100ths Dollars
2.06	20” Steel Encasement	LF	51	$	$	$ _____ And _____/100ths Dollars
2.07	12” x 8” Cross	EA	2	$	$	$ _____ And _____/100ths Dollars
2.08	12” Tee	EA	2	$	$	$ _____ And _____/100ths Dollars
2.09	12” x 10” Tee	EA	1	$	$	$ _____ And _____/100ths Dollars
2.10	12” x 8” Tee	EA	4	$	$	$ _____ And _____/100ths Dollars

Sam Houston Avenue Waterline Replacement
TECHNICAL PROPOSAL PART 1 – BASE BID UNIT COST BREAKDOWN
COH No. 12-11-03 – MBESI No. 10250022

Item No.	Description	Units	Est. Qty.	Unit Price	Amount	Amount in Written Words
2.11	12” x 6” Tee	EA	4	$	$	$ _____ And _____/100ths Dollars
2.12	12” Gate Valve	EA	11	$	$	$ _____ And _____/100ths Dollars
2.13	10" Gate Valve	EA	2	$	$	$ _____ And _____/100ths Dollars
2.14	8" Gate Valve	EA	6	$	$	$ _____ And _____/100ths Dollars
2.15	6" Gate Valve	EA	4	$	$	$ _____ And _____/100ths Dollars
2.16	12” x 10” Reducer	EA	1	$	$	$ _____ And _____/100ths Dollars
2.17	12” x 8” Reducer	EA	1	$	$	$ _____ And _____/100ths Dollars
2.18	12” D.I 90° Bend	EA	3	$	$	$ _____ And _____/100ths Dollars
2.19	12” D.I 45° Bend	EA	4	$	$	$ _____ And _____/100ths Dollars

Sam Houston Avenue Waterline Replacement
TECHNICAL PROPOSAL PART 1 – BASE BID UNIT COST BREAKDOWN
COH No. 12-11-03 – MBESI No. 10250022

Item No.	Description	Units	Est. Qty.	Unit Price	Amount	Amount in Written Words
2.20	12” D.I. 22.5° Bend	EA	4	$	$	$ _____ And _____/100ths Dollars
2.21	12” D.I. 11.25° Bend	EA	2	$	$	$ _____ And _____/100ths Dollars
2.22	10” D.I. 22.5° Bend	EA	1	$	$	$ _____ And _____/100ths Dollars
2.23	8” D.I. 45° Bend	EA	3	$	$	$ _____ And _____/100ths Dollars
2.24	12” Anchor Coupling	EA	12	$	$	$ _____ And _____/100ths Dollars
2.25	10” Anchor Coupling	EA	1	$	$	$ _____ And _____/100ths Dollars
2.26	8” Anchor Coupling	EA	6	$	$	$ _____ And _____/100ths Dollars
2.27	6” Anchor Coupling	EA	4	$	$	$ _____ And _____/100ths Dollars
2.28	10” Compression Coupling	EA	1	$	$	$ _____ And _____/100ths Dollars

Sam Houston Avenue Waterline Replacement
TECHNICAL PROPOSAL PART 1 – BASE BID UNIT COST BREAKDOWN
COH No. 12-11-03 – MBESI No. 10250022

Item No.	Description	Units	Est. Qty.	Unit Price	Amount	Amount in Written Words
2.29	8” Compression Coupling	EA	6	$	$	$ _____ And _____/100ths Dollars
2.30	Fire Hydrant Assembly	EA	7	$	$	$ _____ And _____/100ths Dollars
2.31	Connect to Exist Waterline	EA	17	$	$	$ _____ And _____/100ths Dollars
2.32	Re-Connect Exist. 1” Service	EA	17	$	$	$ _____ And _____/100ths Dollars
2.33	Re-Connect Exist. 1.5” Service	EA	2	$	$	$ _____ And _____/100ths Dollars
2.34	1" Service – Long (Type K Copper)	EA	6	$	$	$ _____ And _____/100ths Dollars
2.35	1" Service – Short (Type K Copper)	EA	20	$	$	$ _____ And _____/100ths Dollars
2.36	1.5" Service – Long (Type K Copper)	EA	1	$	$	$ _____ And _____/100ths Dollars

Sam Houston Avenue Waterline Replacement
TECHNICAL PROPOSAL PART 1 – BASE BID UNIT COST BREAKDOWN
COH No. 12-11-03 – MBESI No. 10250022

Item No.	Description	Units	Est. Qty.	Unit Price	Amount	Amount in Written Words
2.37	1.5" Service – Short (Type K Copper)	EA	2	$	$	$ _____ And _____/100ths Dollars
				Subtotal Water Line Replacement:	$	$ _____ And _____/100ths Dollars

3.00 Pavement Repair

3.01	Driveway/Sidewalk Repair	SY	120	$	$	$ _____ And _____/100ths Dollars
3.02	HMAC Pavement Repair	SY	2,880	$	$	$ _____ And _____/100ths Dollars
				Subtotal Pavement Repair:	$	$ _____ And _____/100ths Dollars

4.00 Miscellaneous Improvements

4.01	Temporary Water Service	LF	1,750	$	$	$ _____ And _____/100ths Dollars
				Subtotal Miscellaneous Improvements:	$	$ _____ And _____/100ths Dollars

Sam Houston Avenue Waterline Replacement
TECHNICAL PROPOSAL PART 1 – BASE BID UNIT COST BREAKDOWN
COH No. 12-11-03 – MBESI No. 10250022

Item No.	Description	Units	Est. Qty.	Unit Price	Amount	Amount in Written Words
5.00	**Erosion Control**					
5.01	Erosion Control Plan & Sedimentation Control (includes monitoring, record keeping and cleanup)	LS	1	10,000.00	$	$ _____ And _____/100ths Dollars
5.02	Inlet Protection	EA	11	250.00	$	$ _____ And _____/100ths Dollars
5.03	Grass Sod	SF	5,000	3.00	$	$ _____ And _____/100ths Dollars
				Subtotal Erosion Control:	$	$ _____ And _____/100ths Dollars
				TOTAL BASE BID:	$	$ _____ And _____/100ths Dollars

The Total Base Bid Unit Price Breakdown amount shall match the Base Proposal Amount shown on Section 00301, Sheet 3.

BASE BID CONSTRUCTION TIME:

The Contractor shall agrees to complete all Work in the following number of calendar days to from the Notice to Proceed:

_____ _____

(Time in words) (Time in Numerals)

PROPOSED PROJECT SCHEDULE:
Contractor shall attach addition documentation regarding anticipated project schedule & duration.

BID ALTERNATES: NONE

This area was intentionally left blank.

PART 2: CONTRACTOR QUALIFICATIONS AND EXPERIENCE

General Contractor's Name: _____

Address: _____

City, State, Zip: _____

Telephone No.:_____Fax No.: _____

State Comptroller Vendor Identification Number: _____

I. GENERAL

1. Qualification information submitted shall be applicable only to the company entity or regional office that will perform this Work.

2. Attach your Project Organization Chart and detailed resumes of individuals assigned to this project including projects manager and superintendent.

3. The resumes of your key personnel shall include professional affiliations such as membership in the American Institute of Constructors and if the individual is a Level I or Level II Certified Professional Constructor. In addition, a listing of other construction personnel within your organization that are members of the American Institute of Constructors shall be included and their respective level of certification. This information will be used to evaluate the proposed team and personnel.

4. Attach a proposed project schedule (Bar chart acceptable).

5. Please attach all requested information to the Part 2 Technical Proposal, proposer's

II. HISTORY

1. Corporation _____ Partnership ___ Sole Proprietorship ___ Joint Venture ___

   State of Incorporation: _____

1. In Continuous business since: _____

   _____
   (Remarks: if necessary)

3. List other fully staffed offices or fully staffed branch offices of your organization:

   Name/Location Branch Manager
   Telephone Number

   _____ _____ _____

4. Corporate Officers, Partners or Owners of Organization:

Name/Location	Branch Manager	Telephone Number
_____	_____	_____
_____	_____	_____
_____	_____	_____
_____	_____	_____

5. Check corresponding to the nature of your business:

__Large Business (100 or more employees)

__Small Business (fewer than 100 employees)

__HUB Business

__Other (Define)

6. Has your organization ever defaulted or failed to complete any work awarded?

__Yes __ No

If yes, stipulate where and why: _____
_____

_____

7. Has your organization ever paid liquidated damages or a penalty for failure to complete a contract on time?

__Yes __ No

If yes, stipulate where and why: _____
_____

_____

8. Has your organization ever been charged with or paid a fine for non-compliance of State and/or Federal statues or regulations?

__Yes __ No

If yes, stipulate where and why: _____
_____

_____

III. EXPERIENCE

1. Normally performs _____% of the work with own forces.

   (List Trades)

   _____

   _____

   _____

   _____

2. Propose to perform _____% of the work for this project with own forces.

   (List Trades)

   _____

   _____

   _____

   _____

3. List 3 major construction projects your organization has in-progress using the format below: (Include as an attachment identified by item and sub-item.)

A. Name and Location of Project:

_____

Contract Amount: _____ Percent Complete: _____

_____

Projected Completion Date: _____

Owner Reference Contact:

_____ _____

Name Telephone

_____

Address A/E Reference Contact:

_____ _____
Name Telephone

B. Name and Location of Project:

_____

Contract Amount: _____ Percent Complete: _____

_____

Projected Completion Date: _____

Owner Reference Contact:

_____ _____
Name Telephone

_____
Address A/E Reference Contact:

_____ _____
Name Telephone

C. Name and Location of Project:

_____

Contract Amount: _____ Percent Complete: _____

_____

Projected Completion Date: _____

Owner Reference Contact:

_____ _____
Name Telephone

_____
Address A/E Reference Contact:

_____ _____
Name Telephone

4. Total number and dollar amount of contracts currently in progress:

_____ $_____
Number Total

5. Largest single contract amount currently in progress:

Project Amount: $_____

Project Name: _____

Project Completion Date: _____

6. Volume of work completed over 5 years:

2016: $_____

2015: $_____

2014: $_____

2013: $_____

2012: $_____

7. List major construction projects your organization has completed in the last 5 years with completion dates and references. Other projects of particular significance may also be listed. (Include as an attachment identified by item and sub-item.) Project listing can be attached.

A. Name and Location of Project:

_____

Contract Amount: _____ Date Completed: _____

_____

Owner Reference Contact:

_____ _____

Name Telephone

_____

Address A/E Reference Contact:

_____ _____

Name Telephone

B. Name and Location of Project:

_____

Contract Amount: _____ Percent Complete: _____

_____

Projected Completion Date: _____

Owner Reference Contact:

_____ _____
Name Telephone

_____
Address A/E Reference Contact:

_____ _____
Name Telephone

8. List pending claims and/or litigation at time of submitting Proposal. (Show project name, owner and summary explanation.)

_____

_____

_____

_____

IV. SAFETY PROGRAM

1. List your organization's Workers Compensation Experience Modification Rate (EMR) for the last five years, as obtained from your insurance agent.

2016: $_____

2015: $_____

2014: $_____

2013: $_____

2012: $_____

2. Complete matrix for the five past years, as obtained from OSHA No. 200 Log:

	2016	2015	2014	2013	2012
Number of injuries and illnesses:	_____	_____	_____	_____	_____
Number of lost time accidents:	_____	_____	_____	_____	_____
Number of recordable cases:	_____	_____	_____	_____	_____
Number of fatalities:	_____	_____	_____	_____	_____
Number of employee direct hire					

fixed hours worked (round to 1,000's) ___ ___ ___ ___ __

3. Are regular project safety meetings held for Field Supervisor(s)? ___ Yes _____ No

   If yes, frequency: ___ Weekly ___ Bi-monthly _____ Monthly _____ As Needed

4. Are project safety inspections conducted? _____ Yes _____ No

   If yes, who performs inspections? _____

   How often? _____

   Who is required to attend? _____

5. Does your organization have a written safety program? ____ Yes ____ No

   If yes, provide a copy. It will become a compliance document upon contract award.

6. Does your organization have a safety orientation program for new employees? ____ Yes ____ No

   For employees promoted to Field Supervisor? ____Yes ____ No

   If yes, does your Supervisor Safety Program include instructions on the following:

Safety work practices: _____ Yes _____ No

Tool box safety meetings: _____ Yes _____ No

First aid procedures: _____ Yes _____ No

Accident investigations: _____ Yes _____ No

Fire protection: _____ Yes _____ No

New worker's orientation: _____ Yes _____ No

V. QUALITY CONTROL PROGRAM

1. Submit a complete quality control program which will become a compliance document upon contract award.

2. This plan should address all aspects of quality control including responsibility for surveillance work, acceptance, rejection, documentation and resolution of deficiencies, trend analysis and corrective action and interface with Owner's inspectors.

VI. FINANCIAL

1. Attach audited Financial Statement for past two (2) years including:

   Profit and loss statements (income statements), balance sheets, and other supporting schedules, if the last audited statements are over 12 months old, include the most current unaudited statements. Financial statements will be received 3 days after proposal reading. If delivered by mail send financial statement to:

2. Surety Company: _____
   Agent: _____
   Name of Contact: _____ Telephone No.: _____

3. Total Bonding Capacity: _____
   Limit Per Project: _____
   Current unencumbered bonding capacity: _____

4. Trade References (Additional references may be included as attached sheets)

   Organization: _____
   Agent: _____
   Name of Contact: _____ Telephone No.: _____

   Organization: _____
   Agent: _____
   Name of Contact: _____ Telephone No.: _____

   Organization: _____
   Agent: _____
   Name of Contact: _____ Telephone No.: _____

   Organization: _____
   Agent: _____
   Name of Contact: _____ Telephone No.: _____

5. Bank References (Additional references may be included as attached sheets)

   Organization: _____
   Agent: _____
   Name of Contact: _____ Telephone No.: _____

   Organization: _____
   Agent: _____
   Name of Contact: _____ Telephone No.: _____

   Organization: _____
   Agent: _____
   Name of Contact: _____ Telephone No.: _____

   Organization: _____

Agent: _____

Name of Contact: _____ Telephone No.: _____

VII. NAMING OF MAJOR SUBCONTRACTORS:

The Electrical, Paving, Earthwork, Etc. Subcontractors, if utilized, must be named below. Failure to name the subcontractor of the requested trade listed may cause the total proposal to be rejected.

After receipt of proposals, substitution(s) of the subcontractor listed may be made only with written approval of Owner.

Subcontractor 1: _____

Trade: _____

Percentage of Contract: _____

Subcontractor 2: _____

Trade: _____

Percentage of Contract: _____

Subcontractor 3: _____

Trade: _____

Percentage of Contract: _____

Subcontractor 4: _____

Trade: _____

Percentage of Contract: _____

PART THREE: POSSIBLE COST REDUCTION ITEMS

The Proposer is encouraged to suggest to the Owner possible cost reduction items to be taken into consideration prior to awarding a Construction Contract. Proposer may include this list as a referenced attachment if additional space is needed. Identify need to revise specified or proposed construction duration period if necessary for each cost reduction item.

(Proposer to Complete)

Accompanying this Proposal is a cashier's check or a Bid Bond (per Section 00410) in the amount of not less than five percent (5%) of the greatest total amount of this Proposal. Use of a surety company bid bond form is NOT acceptable and will constitute an irregular proposal which will be rejected.

The proposer agrees that this Proposal will not be withdrawn for a period of sixty (60) days from the date of the opening.

The proposer further agrees to pay, as Liquidated Damages, the sum of one-thousand-five-hundred dollars ($1,500.00) per calendar day for failure to complete the work within the contracted time in accordance with Article XXIV of the Uniform General Conditions and as established in the Contract.

Proposer:

_____

_____
(Legal Firm Name)

By:

_____
(Signature)

_____
(Print or Typed Name)

Federal Tax I. D. No. _____

Address:

_____

_____

_____

Phone No.: _____

Fax No.: _____

BID BOND

BID (Name and Address):

_____
_____
_____

SURETY (Name and Address of Principal Place of Business):

_____
_____
_____

OWNER (Name and Address):

_____
_____
_____

BID
BID DUE DATE: _____
PROJECT (Brief Description Including Location):

_____
_____
_____

BOND
BOND NUMBER: _____
DATE (Not later than Bid due date): _____
PENAL SUM: _____ _____
(Words) (Figures)

IN WITNESS WHEREOF, Surety and Bidder, intending to be legally bound hereby, subject to the terms printed on the reverse side hereof, do each cause this Bid Bond to be duly executed on its behalf by its authorized officer, agent, or representative.

BIDDER	SURETY
_____ (Seal)	_____ (Seal)
Bidder's Name and Corporation Seal	Surety's Name and Corporation Seal
By: _____	By: _____
Signature and Title	Signature and Title (Attached Power of Attorney)
Attest: _____	Attest: _____
Signature and Title	Signature and Title

Note: (1) Above addresses are to be used for giving required notice.
(2) Any singular reference to Bidder, Surety, OWNER or other party shall be considered plural where applicable.

EJCDC NO. 1910-28-C (1996 Edition)

1. Bidder and Surety, jointly and severally, bind themselves, their heirs, executors, administrators, successors and assigns to pay to OWNER upon default of Bidder the penal sum set forth on the face of this Bond.

2. Default of Bidder shall occur upon the failure of Bidder to deliver within the time required by the Bidding Documents (or any extension thereof agreed to in writing by OWNER) the executed Agreement required by the Bidding Documents and any performance and payment Bonds required by the Bidding Documents.

3. This obligation shall be null and void if:

3.1. OWNER accepts Bidder's Bid and Bidder delivers within the time required by the Bidding Documents (or any extension thereof agreed to in writing by OWNER) the executed Agreement required by the Bidding Documents and any performance and payment Bonds required by the Bidding Documents, or

3.2. All Bids are rejected by OWNER, or

3.3. OWNER fails to issue a Notice of Award to Bidder within the time specified in the Bidding Documents (or any extension thereof agreed to in writing by Bidder and, if applicable, consented to by Surety when required by paragraph 5 hereof).

4. Payment under this Bond will be due and payable upon default by Bidder and within 30 calendar days after receipt by Bidder and Surety of written notice of default from OWNER, which notice will be given with reasonable promptness, identifying this Bond and the Project and including a statement of the amount due.

5. Surety waives notice of and any and all defenses based on or arising out of any time extension to issue Notice of Award agreed to in writing by OWNER and Bidder, provided that the total time for issuing Notice of Award including extensions shall not in the aggregate exceed 120 days from Bid due date without Surety's written consent.

6. No suit or action shall be commenced under this Bond prior to 30 calendar days after the notice of default required in paragraph 4 above is received by Bidder and Surety and in no case later than one year after Bid due date.

7. Any suit or action under this Bond shall be commenced only in a court of competent jurisdiction located in the state in which the Project is located.

8. Notices required hereunder shall be in writing and sent to Bidder and Surety at their respective addresses shown on the face of this Bond. Such notices may be sent by personal delivery, commercial courier or by United States Registered or Certified Mail, return receipt requested, postage pre-paid, and shall be deemed to be effective upon receipt by the party concerned.

9. Surety shall cause to be attached to this Bond a current and effective Power of Attorney evidencing the authority of the officer, agent or representative who executed this Bond on behalf of Surety to execute, seal and deliver such Bond and bind the Surety thereby.

10. This Bond is intended to conform to all applicable statutory requirements. Any applicable requirement of any applicable statute that has been omitted from this Bond shall be deemed to be included herein as if set forth at length. If any provision of this Bond conflicts with any applicable statute, then the provision of said statute shall govern and the remainder of this Bond that is not in conflict therewith shall continue in full force and effect.

11. The term "Bid' as used herein includes a Bid, offer or proposal as applicable.

STANDARD FORM OF AGREEMENT

STATE OF TEXAS §
COUNTY OF WALKER §

This AGREEMENT, made by and between the CITY OF HUNTSVILLE, TEXAS a municipal corporation of the County of Walker and State of Texas, acting through its City Manager, Matt Benoit, thereunto duly authorized so to do, Party of the First Part, hereinafter termed "OWNER", and _____, Party of the Second Part, hereinafter termed "CONTRACTOR".

WITNESSETH: That for and in consideration of the payments and agreements hereinafter mentioned, to be made and performed by the Party of the First Part (OWNER), and under the conditions expressed in the bond bearing even date herewith, the said Party of the Second Part (CONTRACTOR), hereby agrees with the said Party of the First Part (OWNER) to commence and complete the construction of certain improvements described as follows:

Project No. 12-11-03
MBESI Project No. 10250022
Project Name: Sam Houston Ave Waterline Replacement

and all extra work in connection therewith, under the terms as stated in the General Conditions of the Agreement and at his (or their) own proper cost and expense to furnish all the materials, supplies, machinery, equipment, tools, superintendence, labor, insurance, and other accessories and services necessary to complete the said construction, in accordance with the conditions and prices stated in the Proposal attached hereto, and in accordance with the Request for Competitive Sealed Proposals, General and Special Conditions of Agreement, Technical Specifications, Plans and other drawings and printed or written explanatory matter hereof, and the Specifications and addenda therefor, as prepared by the City Engineer and/or McClure & Browne Engineering/Surveying Inc., herein entitled the ENGINEER, each of which has been identified by the CONTRACTOR and the agreement, and the Performance and Payment Bonds hereto attached; all of which are made a part hereof and collectively evidence and constitute the entire contract.

The CONTRACTOR hereby agrees to commence work on the date specified in the written "Notice to Proceed" from the City, and to substantially complete the contract duration specified in the proposal, measured from the date given in the "Notice to Proceed", subject to such extensions of time as are provided by the General and Special Conditions.

The Owner pursuant to this Contract will be represented by the City Engineer, herein sometimes referred to as the Owner's representative, who has the authority to act for the Owner with regard to this Contract.

The Owner shall retain 5% of the total Contract price until all inspections, including TDLR/ADA inspections (if applicable) have been completed, approved, and accepted by the respective agencies to insure compliance by the contractor for Owner.

The OWNER agrees to pay the CONTRACTOR in current funds the price or prices shown in the proposal, which forms a part of this contract, such payments to be subject of the General and Special Conditions of the contract.

IN WITNESS WHEREOF, the parties to these presents have executed this Agreement. This Agreement will be effective as of the date last signed and dated by the parties below.

City of Huntsville, Texas	_____
Party of the First Part	Party of the Second Part
(OWNER)	(CONTRACTOR)
By:_____	By_____
Matt Benoit, City Manager	
Date:_____	Date:_____
ATTEST: _____	ATTEST: _____
Lee Woodward, City Secretary	
Date:_____	Date:_____

Approved by Council:_____

Approved as to form:

_____
Leonard Schneider, City Attorney

CORPORATE RESOLUTION
OF

_____

I hereby certify that it was RESOLVED by a quorum of the directors of _____. meeting on the _____ day of _____ , 2017, that _____, (title) be, and hereby is, authorized to execute all documents necessary to the transaction of business in the State of Texas on behalf of the said _____. , and the City of Huntsville.

That the above resolution was unanimously ratified by the Board of Directors at said meeting and that the resolution has not been rescinded or amended and is now in full force and effect; and

In authentication of the adoption of this resolution, I subscribe my name and affix the seal of the Corporation this _____ day of _____ , 2017.

_____
Secretary

SEAL

This page was intentionally left blank.

Construction Performance Bond

Any singular reference to Contractor, Surety, Owner or other party shall be considered plural where applicable.

CONTRACTOR (Name and Address):

SURETY (Name and Address of Principal Place of Business):

OWNER (Name and Address):

CONTRACT
Date:
Amount:
Description (Name and Location):

BOND
Date (Not earlier than Contract Date):
Amount:
Modifications to this Bond Form:

1. In the event of litigation involving the bond or the contract, venue will lie in the county wherein the project is located.
2. All sureties executing bonds must be licensed in the State of Texas.
3. The obligation of the surety company under the Performance Bond extends throughout the one-year warranty period.

Surety and Contractor, intending to be legally bound hereby, subject to the terms printed on the reverse side hereof, do each cause this Performance Bond to be duly executed on its behalf by its authorized officer, agent or representative.

CONTRACTOR AS PRINCIPAL
Company: (Corp. Seal)

Signature: _____
Name and Title:

SURETY
Company: (Corp. Seal)

Signature: _____
Name and Title:
(Attach Power of Attorney)

(Space is provided below for signatures of additional parties, if required.)

CONTRACTOR AS PRINCIPAL
Company: (Corp. Seal)

Signature: _____
Name and Title:

SURETY
Company: (Corp. Seal)

Signature: _____
Name and Title:

EJCDC No. 1910-28-A (1996 Edition)
Originally prepared through the joint efforts of the Surety Association of America, Engineers Joint Contract Documents Committee, the Associated General Contractors of America, and the American Institute of Architects.

1. The CONTRACTOR and the Surety, jointly and severally, bind themselves, their heirs, executors, administrators, successors and assigns to the Owner for the performance of the Contract, which is incorporated herein by reference.

2. If the CONTRACTOR performs the Contract, the Surety and the CONTRACTOR have no obligation under this Bond, except to participate in conferences as provided in paragraph 3. 1.

3. If there is no OWNER Default, the Surety's obligation under this Bond shall arise after:

3.1. The OWNER has notified the CONTRACTOR and the Surety at the addresses described in paragraph 10 below, that the OWNER is considering declaring a CONTRACTOR Default and has requested and attempted to arrange a conference with the CONTRACTOR and the Surety to be held not later than fifteen days after receipt of such notice to discuss methods of performing the Contract. If the OWNER, the CONTRACTOR and the Surety agree, the CONTRACTOR shall be allowed a reasonable time to perform that Contract, but such an agreement shall not waive the OWNER's right, if any, subsequently to declare a CONTRACTOR Default; and

3.2. The OWNER has declared a CONTRACTOR Default and formally terminated the CONTRACTOR's right to complete the Contract. Such CONTRACTOR Default shall not be declared earlier than twenty days after the CONTRACTOR and the Surety have received notice as provided in paragraph 3. 1; and

3.3. The OWNER has agreed to pay the Balance of the Contract Price to:

3.3.1. The Surety in accordance with the terms of the Contract;

3.3.2. Another contractor selected pursuant to paragraph 4.3 to perform the Contract.

4. When the OWNER has satisfied the conditions of paragraph 3, the Surety shall promptly and at the Surety's expense take one of the following actions:

4.1. Arrange for the CONTRACTOR, with consent of the OWNER, to perform and complete the Contract; or

4.2. Undertake to perform and complete the Contract itself, through its agents or through independent contractors; or

4.3. Obtain bids or negotiated proposals from qualified contractors acceptable to the OWNER for a contract for performance and completion of the Contract, arrange for a contract to be prepared for execution by the OWNER and the contractor selected with the OWNER's concurrence, to be secured with performance and payment bonds executed by a qualified surety equivalent to the Bonds issued on the Contract, and pay to the OWNER the amount of damages as described in paragraph 6 in excess of the Balance of the Contract Price incurred by the OWNER resulting from the CONTRACTOR Default; or

4.4. Waive its right to perform and complete, arrange for completion, or obtain a new contractor and with reasonable promptness under the circumstances;

4.4.1 After investigation, determine the amount for which it may be liable to the OWNER and, as soon as practicable after the amount is determined, tender payment therefor to the OWNER; or

4.4.2 Deny liability in whole or in part and notify the OWNER citing reasons therefor.

5. If the Surety does not proceed as provided in paragraph 4 with reasonable promptness, the Surety shall be deemed to be in default on this Bond fifteen days after receipt of an additional written notice from the OWNER to the Surety demanding that the Surety perform its obligations under this Bond, and the OWNER shall be entitled to enforce any remedy available to the OWNER. If the Surety proceeds as provided in paragraph 4.4, and the OWNER refuses the payment tendered or the Surety has denied liability, in whole or in part, without further notice the OWNER shall be entitled to enforce any remedy available to the OWNER.

6. After the OWNER has terminated the CONTRACTOR's right to complete the Contract, and if the Surety elects to act under paragraph 4.1. 4.2. or 4.3 above, then the responsibilities of the Surety to the OWNER shall not be greater than those of the CONTRACTOR under the Contract, and die responsibilities of the OWNER to the Surety shall not be greater than those of the OWNER under the Contract. To a limit of the amount of this Bond, but subject to commitment by the OWNER of the Balance of the Contract Price to mitigation of costs and damages on the Contract, the Surety is obligated without duplication for:

6.1. The responsibilities of the CONTRACTOR for correction of defective Work and completion of the Contract;

6.2. Additional legal, design professional and delay costs resulting from the CONTRACTOR's Default, and resulting from the actions or failure to act of the Surety under paragraph 4; and

6.3. Liquidated damages, or if no liquidated damages are specified in the Contract, actual damages caused by delayed performance or non-performance of the CONTRACTOR.

7. The Surety shall not be liable to the OWNER or others for obligations of the CONTRACTOR that are unrelated to the Contract, and the Balance of the Contract Price shall not be reduced or set off on account of any such unrelated obligations. No right of action shall accrue on this Bond to any person or entity other than the OWNER or its heirs, executors, administrators, or successors.

8. The Surety hereby waives notice of any change, including changes of time, to the Contract or to related subcontracts. purchase orders and other obligations.

9. Any proceeding, legal or equitable, under this Bond may be instituted in any court of competent jurisdiction in the location in which the Work or part of the Work is located and shall be instituted within two years after CONTRACTOR Default or within two years after the CONTRACTOR ceased working or within two years after the Surety refuses or fails to perform its obligations under this Bond, whichever occurs first. If the provisions of this paragraph are void or prohibited by law, the minimum period of limitation available to sureties as a defense in the jurisdiction of the suit shall be applicable.

10. Notice to the Surety, the OWNER or the CONTRACTOR shall be mailed or delivered to the address shown on the signature page.

11. When this Bond has been furnished to comply with a statutory or other legal requirement in the location where the Contract was be performed, any provision in this Bond conflicting with said statutory or legal requirement shall be deemed deleted here from and provisions conforming to such statutory or other legal requirement shall be deemed incorporated herein. The intent is that this Bond shall be construed as a statutory bond and not as a common law bond.

12. Definitions.

12.1. Balance of the Contract Price: The total amount payable by the OWNER to the CONTRACTOR under the Contract after all proper adjustments have been made, including allowance to the CONTRACTOR of any amounts received or to be received by the OWNER in settlement of insurance or other Claims for damages to which the CONTRACTOR is entitled, reduced by all valid and proper payments made to or on behalf of the CONTRACTOR under the Contract.

12.2. Contract: The agreement between the OWNER and the CONTRACTOR identified on the signature page, including all Contract Documents and changes thereto.

12.3. CONTRACTOR Default: Failure of the CONTRACTOR, which has neither been remedied nor waived, to perform or otherwise to Comply with the terms of the Contract.

12.4. OWNER Default: Failure of the OWNER, which has neither been remedied nor waived, to pay the CONTRACTOR as required by the Contract or to perform and complete or comply with the other terms thereof.

Construction Payment Bond

Any singular reference to Contractor, Surety, Owner or other party shall be considered plural where applicable.

CONTRACTOR (Name and Address):

SURETY (Name and Address of Principal Place of Business):

OWNER (Name and Address):

CONTRACT
Date:
Amount:
Description (Name and Location):

BOND
Date (Not earlier than Contract Date):
Amount:
Modifications to this Bond Form:

1. In the event of litigation involving the bond or the contract, venue will lie in the county wherein the project is located.
2. All sureties executing bonds must be licensed in the State of Texas.
3. The obligation of the surety company under the Performance Bond extends throughout the one-year warranty period.

Surety and Contractor, intending to be legally bound hereby, subject to the terms printed on the reverse side hereof, do each cause this Performance Bond to be duly executed on its behalf by its authorized officer, agent or representative.

CONTRACTOR AS PRINCIPAL
Company: (Corp. Seal)

Signature: _____
Name and Title:

SURETY
Company: (Corp. Seal)

Signature: _____
Name and Title:
(Attach Power of Attorney)

(Space is provided below for signatures of additional parties, if required.)

CONTRACTOR AS PRINCIPAL
Company: (Corp. Seal)

Signature: _____
Name and Title:

SURETY
Company: (Corp. Seal)

Signature: _____
Name and Title:

EJCDC No. 1910-28-B (1996 Edition)
Originally prepared through the joint efforts of the Surety Association of America, Engineers Joint Contract Documents Committee, the Associated General Contractors of America, and the American Institute of Architects.

1. The CONTRACTOR and the Surety, jointly and severally, bind themselves, their heirs, executors, administrators, successors and assigns to the OWNER to pay for labor, materials and equipment furnished for use in the performance of the Contract, which is incorporated herein by reference.

2. With respect to the OWNER, this obligation shall be null and void if the CONTRACTOR:

2.1. Promptly makes payment, directly or indirectly, for all sums due Claimants, and

2.2. Defends, indemnifies and holds harmless the OWNER from all claims, demands, liens or suits by any person or entity who furnished labor, materials or equipment for use in the performance of the Contract, provided the OWNER has promptly notified the CONTRACTOR and the Surety (at the addresses described in paragraph 12) of any claims, demands, liens or suits and tendered defense of such claims, demands, liens or suits to the CONTRACTOR and the Surety, and provided there is no OWNER Default.

3. With respect to Claimants, this obligation shall be null and void if the CONTRACTOR promptly makes payment, directly or indirectly, for all sums due.

4. The Surety shall have no obligation to Claimants under this Bond until:

4.1. Claimants who are employed by or have a direct contract with the CONTRACTOR have given notice to the Surety (at the addresses described in paragraph 12) and sent a copy, or notice thereof, to the OWNER, stating that a claim is being made under this Bond and, with substantial accuracy, the amount of the claim.

4.2. Claimants who do not have a direct contract with the CONTRACTOR:

1 . Have furnished written notice to the CONTRACTOR and sent a copy, or notice thereof, to the OWNER, within 90 days after having last performed labor or last furnished materials or equipment included in the claim stating, with substantial accuracy, the amount of the claim and the name of the parry to whom the materials were furnished or supplied or for whom the labor was done or performed; and

2. Have either received a rejection in whole or in part from the CONTRACTOR, or not received within 30 days of furnishing the above notice any communication from the CONTRACTOR by which the CONTRACTOR had indicated the claim will be paid directly or indirectly; and

3. Not having been paid within the above 30 days, have sent a written notice to the Surety and sent a copy, or notice thereof, to the OWNER, stating that a claim is being made under this Bond and enclosing a copy of the previous written notice furnished to the CONTRACTOR.

5. If a notice required by paragraph 4 is given by the OWNER to the CONTRACTOR or to the Surety, that is sufficient compliance.

6. When the Claimant has satisfied the conditions of paragraph 4, the Surety shall promptly and at the Surety's expense take the following actions:

6.1. Send an answer to the Claimant, with a copy to the OWNER, within 45 days after receipt of the claim, stating the amounts that are undisputed and the basis for challenging any amounts that are disputed.

6.2. Pay or arrange for payment of any undisputed amounts.

7. The Surety's total obligation shall not exceed the amount of this Bond, and the amount of this Bond shall be credited for any payments made in good faith by the Surety.

8. Amounts owed by the OWNER to the CONTRACTOR under the Contract shall be used for the performance of the Contract and to satisfy claims, if any, under any Performance Bond. By the CONTRACTOR furnishing and the OWNER accepting this Bond, they agree that all funds earned by the CONTRACTOR in the performance of the Contract are dedicated to satisfy obligations of the CONTRACTOR and the Surety under this Bond, subject to the OWNER's priority to use the funds for the completion of the Work.

9. The Surety shall not be liable to the OWNER, Claimants or others for obligations of the CONTRACTOR that are unrelated to the Contract. Ile OWNER shall not be liable for payment of any costs or expenses of any Claimant under this Bond, and shall have under this Bond no obligations to make payments to, give notices on behalf of, or otherwise have obligations to Claimants under this Bond.

10. The Surety hereby waives notice of any change, including changes of time, to the Contract or to related Subcontracts, purchase orders and other obligations.

11. No suit or action shall be commenced by a Claimant under this Bond other than in a court of competent jurisdiction in the location in which the Work or part of the Work is located or after the expiration of one year from the date (1) on which the Claimant gave the notice required by paragraph 4.1 or paragraph 4.2.3. or (2) on which the last labor or service was performed by anyone or the last materials or equipment were furnished by anyone under the Construction Contract, whichever of (1) or (2) first occurs. If the provisions of this paragraph are void or prohibited by law, the minimum period of limitation available to sureties as a defense in the jurisdiction of the suit shall be applicable.

12. Notice to the Surety, the OWNER or the CONTRACTOR shall be mailed or delivered to the addresses shown on the signature page. Actual receipt of notice by Surety, the OWNER or the CONTRACTOR, however accomplished, shall be sufficient compliance as of the date received at the address shown on the signature page.

13. When this Bond has been furnished to comply with a statutory or other legal requirement in the location where the Contract was to be performed, any provision in this Bond conflicting with said statutory or legal requirement shall be deemed deleted herefrom and provisions conforming to such statutory or other legal requirement shall be deemed incorporated herein. The intent is, that this Bond shall be construed as a statutory Bond and not as a common law bond.

14. Upon request of any person or entity appearing to be a potential beneficiary of this Bond, the CONTRACTOR shall promptly furnish a copy of this Bond or shall permit a copy to be made.

15. DEFINITIONS

15.1. Claimant: An individual or entity having a direct contract with the CONTRACTOR or with a Subcontractor of the CONTRACTOR to furnish labor, materials or equipment for use in the performance of the Contract. The intent of this Bond shall be to include without limitation in the terms "labor, materials or equipment" dig part of water, gas, power, light, heat, oil, gasoline, telephone service or rental equipment used in the Contract, architectural and engineering services required for performance of the Work of the CONTRACTOR and the CONTRACTOR's Subcontractors, and all other items for which a mechanic's lien may be asserted in the jurisdiction where the labor, materials or equipment were furnished.

15.2. Contract: The agreement between the OWNER and the CONTRACTOR identified on the signature page, including all Contract Documents and changes thereto.

15.3. OWNER Default: Failure of the OWNER, which has neither been remedied nor waived, to pay the CONTRACTOR as required by the Contract or to perform and complete or comply with the other terms thereof.

TEXAS ETHICS COMMISION FORM 1295

Pursuant to newly enacted Section 2252 of the Texas Government Code as of January 1, 2016, any business entity entering into a contract with a local government that requires approval of the governing body must submit a Disclosure of Interested Parties to the local government prior to the execution of the contract. The Texas Ethics Commission (TEC) has adopted a form for the Disclosure of Interested Parties (Form 1295) and has created a website application for business entities to submit the required information.

The City of Huntsville may not enter into a contract that requires the approval of the City Council until the business entity that is a party to the contract files a Form 1295 with the Texas Ethics Commission and the City of Huntsville Purchasing Department.

1. Upon being notified of a bid/recommended award, the award recipient, the business entity, must go the following website: and follow the login directions on the website application to complete a Form 1295. It this is a business entity's first time login on to the website application, the business entity must create a login Username and Password then follow the application's instructions to complete a Form 1295.

2. The City does not have a Contract ID Number System. Please insert the City of Huntsville's bid or project number in this box.

3. Once confirmation is received, that the information has been submitted with the Texas Ethics Commission, the business entity MUST print, sign and notarize Form 1295.

4. The notarized Form 1295 must be filed with the Texas Ethics Commission within seven (7) business days of the date of notification of recommended award. The contract will not be presented to City Council until the form has been filed with the Texas Ethics Commission and the City of Huntsville has received the notarized Form 1295.

5. In no way does a request for filing of Form 1295 with the Texas Ethics Commission commit the City to any type of award whatsoever.

6. Once the City of Huntsville Purchasing Department receives the notarized Form 1295, the Purchasing Department will submit confirmation of receipt through the Texas Ethics Commission website within thirty (30) days.

7. This process must be followed for each contract requiring City of Huntsville Council approval.

8. A Form 1295 cannot be hand written. It must be completed electronically through the Texas Ethics Commission website application.

9. If you have any questions contact the City of Huntsville Purchasing Department, 936.291.5495 Mail notarized Form 1295 to Attention Purchasing Department, City Service Center, 448 SH 75 N, Huntsville, TX 77320.

This page was intentionally left blank.

This document has important legal consequences; consultation with an attorney is encouraged with respect to its use or modification. This document should be adapted to the particular circumstances of the contemplated Project and the controlling Laws and Regulations.

STANDARD GENERAL CONDITIONS OF THE CONSTRUCTION CONTRACT

Prepared by

ENGINEERS JOINT CONTRACT DOCUMENTS COMMITTEE

and

Issued and Published Jointly by

AMERICAN COUNCIL OF ENGINEERING COMPANIES

ASSOCIATED GENERAL CONTRACTORS OF AMERICA

AMERICAN SOCIETY OF CIVIL ENGINEERS

PROFESSIONAL ENGINEERS IN PRIVATE PRACTICE
A Practice Division of the
NATIONAL SOCIETY OF PROFESSIONAL ENGINEERS

Endorsed by

CONSTRUCTION SPECIFICATIONS INSTITUTE

Copyright © 2007 National Society of Professional Engineers for EJCDC. All rights reserved.

These General Conditions have been prepared for use with the Suggested Forms of Agreement Between Owner and Contractor (EJCDC C-520 or C-525, 2007 Editions). Their provisions are interrelated and a change in one may necessitate a change in the other. Comments concerning their usage are contained in the Narrative Guide to the EJCDC Construction Documents (EJCDC C-001, 2007 Edition). For guidance in the preparation of Supplementary Conditions, see Guide to the Preparation of Supplementary Conditions (EJCDC C-800, 2007 Edition).

Copyright © 2007 National Society of Professional Engineers
1420 King Street, Alexandria, VA 22314-2794
(703) 684-2882
www.nspe.org

American Council of Engineering Companies
1015 15th Street N.W., Washington, DC 20005
(202) 347-7474
www.acec.org

American Society of Civil Engineers
1801 Alexander Bell Drive, Reston, VA 20191-4400
(800) 548-2723
www.asce.org

Associated General Contractors of America
2300 Wilson Boulevard, Suite 400, Arlington, VA 22201-3308
(703) 548-3118
www.agc.org

The copyright for this EJCDC document is owned jointly by the four
EJCDC sponsoring organizations and held in trust for their benefit by NSPE.

Copyright © 2007 National Society of Professional Engineers for EJCDC. All rights reserved.

STANDARD GENERAL CONDITIONS OF THE CONSTRUCTION CONTRACT

TABLE OF CONTENTS

Page

Article 1 – Definitions and Terminology 1
1.01 Defined Terms 1
1.02 Terminology 5

Article 2 – Preliminary Matters 6
2.01 Delivery of Bonds and Evidence of Insurance 6
2.02 Copies of Documents 6
2.03 Commencement of Contract Times; Notice to Proceed 6
2.04 Starting the Work 7
2.05 Before Starting Construction 7
2.06 Preconstruction Conference; Designation of Authorized Representatives 7
2.07 Initial Acceptance of Schedules 7

Article 3 – Contract Documents: Intent, Amending, Reuse 8
3.01 Intent 8
3.02 Reference Standards 8
3.03 Reporting and Resolving Discrepancies 8
3.04 Amending and Supplementing Contract Documents 9
3.05 Reuse of Documents 10
3.06 Electronic Data 10

Article 4 – Availability of Lands; Subsurface and Physical Conditions; Hazardous Environmental Conditions; Reference Points 10
4.01 Availability of Lands 10
4.02 Subsurface and Physical Conditions 11
4.03 Differing Subsurface or Physical Conditions 11
4.04 Underground Facilities 13
4.05 Reference Points 14
4.06 Hazardous Environmental Condition at Site 14

Article 5 – Bonds and Insurance 16
5.01 Performance, Payment, and Other Bonds 16
5.02 Licensed Sureties and Insurers 16
5.03 Certificates of Insurance 16
5.04 Contractor's Insurance 17
5.05 Owner's Liability Insurance 18
5.06 Property Insurance 18
5.07 Waiver of Rights 20
5.08 Receipt and Application of Insurance Proceeds 21

Copyright © 2007 National Society of Professional Engineers for EJCDC. All rights reserved.

5.09 Acceptance of Bonds and Insurance; Option to Replace 21
5.10 Partial Utilization, Acknowledgment of Property Insurer 21

Article 6 – Contractor's Responsibilities 22
6.01 Supervision and Superintendence 22
6.02 Labor; Working Hours 22
6.03 Services, Materials, and Equipment 22
6.04 Progress Schedule 23
6.05 Substitutes and "Or-Equals" 23
6.06 Concerning Subcontractors, Suppliers, and Others 25
6.07 Patent Fees and Royalties 27
6.08 Permits 27
6.09 Laws and Regulations 27
6.10 Taxes 28
6.11 Use of Site and Other Areas 28
6.12 Record Documents 29
6.13 Safety and Protection 29
6.14 Safety Representative 30
6.15 Hazard Communication Programs 30
6.16 Emergencies 30
6.17 Shop Drawings and Samples 30
6.18 Continuing the Work 32
6.19 Contractor's General Warranty and Guarantee 32
6.20 Indemnification 33
6.21 Delegation of Professional Design Services 34

Article 7 – Other Work at the Site 35
7.01 Related Work at Site 35
7.02 Coordination 35
7.03 Legal Relationships 36

Article 8 – Owner's Responsibilities 36
8.01 Communications to Contractor 36
8.02 Replacement of Engineer 36
8.03 Furnish Data 36
8.04 Pay When Due 36
8.05 Lands and Easements; Reports and Tests 36
8.06 Insurance 36
8.07 Change Orders 36
8.08 Inspections, Tests, and Approvals 37
8.09 Limitations on Owner's Responsibilities 37
8.10 Undisclosed Hazardous Environmental Condition 37
8.11 Evidence of Financial Arrangements 37
8.12 Compliance with Safety Program 37

Article 9 – Engineer's Status During Construction 37
9.01 Owner's Representative 37
9.02 Visits to Site 37

Copyright © 2007 National Society of Professional Engineers for EJCDC. All rights reserved.

9.03 Project Representative 38
9.04 Authorized Variations in Work 38
9.05 Rejecting Defective Work 38
9.06 Shop Drawings, Change Orders and Payments 38
9.07 Determinations for Unit Price Work 39
9.08 Decisions on Requirements of Contract Documents and Acceptability of Work 39
9.09 Limitations on Engineer's Authority and Responsibilities 39
9.10 Compliance with Safety Program 40

Article 10 – Changes in the Work; Claims 40
10.01 Authorized Changes in the Work 40
10.02 Unauthorized Changes in the Work 40
10.03 Execution of Change Orders 41
10.04 Notification to Surety 41
10.05 Claims 41

Article 11 – Cost of the Work; Allowances; Unit Price Work 42
11.01 Cost of the Work 42
11.02 Allowances 45
11.03 Unit Price Work 45

Article 12 – Change of Contract Price; Change of Contract Times 46
12.01 Change of Contract Price 46
12.02 Change of Contract Times 47
12.03 Delays 47

Article 13 – Tests and Inspections; Correction, Removal or Acceptance of Defective Work 48
13.01 Notice of Defects 48
13.02 Access to Work 48
13.03 Tests and Inspections 48
13.04 Uncovering Work 49
13.05 Owner May Stop the Work 50
13.06 Correction or Removal of Defective Work 50
13.07 Correction Period 50
13.08 Acceptance of Defective Work 51
13.09 Owner May Correct Defective Work 51

Article 14 – Payments to Contractor and Completion 52
14.01 Schedule of Values 52
14.02 Progress Payments 52
14.03 Contractor's Warranty of Title 55
14.04 Substantial Completion 55
14.05 Partial Utilization 56
14.06 Final Inspection 56
14.07 Final Payment 57
14.08 Final Completion Delayed 58
14.09 Waiver of Claims 58

Copyright © 2007 National Society of Professional Engineers for EJCDC. All rights reserved.

Article 15 – Suspension of Work and Termination 58
15.01 Owner May Suspend Work 58
15.02 Owner May Terminate for Cause 58
15.03 Owner May Terminate For Convenience 60
15.04 Contractor May Stop Work or Terminate 60

Article 16 – Dispute Resolution 61
16.01 Methods and Procedures 61

Article 17 – Miscellaneous 61
17.01 Giving Notice 61
17.02 Computation of Times 61
17.03 Cumulative Remedies 62
17.04 Survival of Obligations 62
17.05 Controlling Law 62
17.06 Headings 62

Copyright © 2007 National Society of Professional Engineers for EJCDC. All rights reserved.

ARTICLE 1 – DEFINITIONS AND TERMINOLOGY

1.01 *Defined Terms*

A. Wherever used in the Bidding Requirements or Contract Documents and printed with initial capital letters, the terms listed below will have the meanings indicated which are applicable to both the singular and plural thereof. In addition to terms specifically defined, terms with initial capital letters in the Contract Documents include references to identified articles and paragraphs, and the titles of other documents or forms.

1. *Addenda*—Written or graphic instruments issued prior to the opening of Bids which clarify, correct, or change the Bidding Requirements or the proposed Contract Documents.

2. *Agreement*—The written instrument which is evidence of the agreement between Owner and Contractor covering the Work.

3. *Application for Payment*—The form acceptable to Engineer which is to be used by Contractor during the course of the Work in requesting progress or final payments and which is to be accompanied by such supporting documentation as is required by the Contract Documents.

4. *Asbestos*—Any material that contains more than one percent asbestos and is friable or is releasing asbestos fibers into the air above current action levels established by the United States Occupational Safety and Health Administration.

5. *Bid*—The offer or proposal of a Bidder submitted on the prescribed form setting forth the prices for the Work to be performed.

6. *Bidder*—The individual or entity who submits a Bid directly to Owner.

7. *Bidding Documents*—The Bidding Requirements and the proposed Contract Documents (including all Addenda).

8. *Bidding Requirements*—The advertisement or invitation to bid, Instructions to Bidders, Bid security of acceptable form, if any, and the Bid Form with any supplements.

9. *Change Order*—A document recommended by Engineer which is signed by Contractor and Owner and authorizes an addition, deletion, or revision in the Work or an adjustment in the Contract Price or the Contract Times, issued on or after the Effective Date of the Agreement.

10. *Claim*—A demand or assertion by Owner or Contractor seeking an adjustment of Contract Price or Contract Times, or both, or other relief with respect to the terms of the Contract. A demand for money or services by a third party is not a Claim.

11. *Contract*—The entire and integrated written agreement between the Owner and Contractor concerning the Work. The Contract supersedes prior negotiations, representations, or agreements, whether written or oral.

Copyright © 2007 National Society of Professional Engineers for EJCDC. All rights reserved.

12. *Contract Documents*—Those items so designated in the Agreement. Only printed or hard copies of the items listed in the Agreement are Contract Documents. Approved Shop Drawings, other Contractor submittals, and the reports and drawings of subsurface and physical conditions are not Contract Documents.

13. *Contract Price*—The moneys payable by Owner to Contractor for completion of the Work in accordance with the Contract Documents as stated in the Agreement (subject to the provisions of Paragraph 11.03 in the case of Unit Price Work).

14. *Contract Times*—The number of days or the dates stated in the Agreement to: (i) achieve Milestones, if any; (ii) achieve Substantial Completion; and (iii) complete the Work so that it is ready for final payment as evidenced by Engineer's written recommendation of final payment.

15. *Contractor*—The individual or entity with whom Owner has entered into the Agreement.

16. *Cost of the Work*—See Paragraph 11.01 for definition.

17. *Drawings*—That part of the Contract Documents prepared or approved by Engineer which graphically shows the scope, extent, and character of the Work to be performed by Contractor. Shop Drawings and other Contractor submittals are not Drawings as so defined.

18. *Effective Date of the Agreement*—The date indicated in the Agreement on which it becomes effective, but if no such date is indicated, it means the date on which the Agreement is signed and delivered by the last of the two parties to sign and deliver.

19. *Engineer*—The individual or entity named as such in the Agreement.

20. *Field Order*—A written order issued by Engineer which requires minor changes in the Work but which does not involve a change in the Contract Price or the Contract Times.

21. *General Requirements*—Sections of Division 1 of the Specifications.

22. *Hazardous Environmental Condition*—The presence at the Site of Asbestos, PCBs, Petroleum, Hazardous Waste, or Radioactive Material in such quantities or circumstances that may present a substantial danger to persons or property exposed thereto.

23. *Hazardous Waste*—The term Hazardous Waste shall have the meaning provided in Section 1004 of the Solid Waste Disposal Act (42 USC Section 6903) as amended from time to time.

24. *Laws and Regulations; Laws or Regulations*—Any and all applicable laws, rules, regulations, ordinances, codes, and orders of any and all governmental bodies, agencies, authorities, and courts having jurisdiction.

25. *Liens*—Charges, security interests, or encumbrances upon Project funds, real property, or personal property.

26. *Milestone*—A principal event specified in the Contract Documents relating to an intermediate completion date or time prior to Substantial Completion of all the Work.

Copyright © 2007 National Society of Professional Engineers for EJCDC. All rights reserved.

27. *Notice of Award*—The written notice by Owner to the Successful Bidder stating that upon timely compliance by the Successful Bidder with the conditions precedent listed therein, Owner will sign and deliver the Agreement.

28. *Notice to Proceed*—A written notice given by Owner to Contractor fixing the date on which the Contract Times will commence to run and on which Contractor shall start to perform the Work under the Contract Documents.

29. *Owner*—The individual or entity with whom Contractor has entered into the Agreement and for whom the Work is to be performed.

30. *PCBs*—Polychlorinated biphenyls.

31. *Petroleum*—Petroleum, including crude oil or any fraction thereof which is liquid at standard conditions of temperature and pressure (60 degrees Fahrenheit and 14.7 pounds per square inch absolute), such as oil, petroleum, fuel oil, oil sludge, oil refuse, gasoline, kerosene, and oil mixed with other non-Hazardous Waste and crude oils.

32. *Progress Schedule*—A schedule, prepared and maintained by Contractor, describing the sequence and duration of the activities comprising the Contractor's plan to accomplish the Work within the Contract Times.

33. *Project*—The total construction of which the Work to be performed under the Contract Documents may be the whole, or a part.

34. *Project Manual*—The bound documentary information prepared for bidding and constructing the Work. A listing of the contents of the Project Manual, which may be bound in one or more volumes, is contained in the table(s) of contents.

35. *Radioactive Material*—Source, special nuclear, or byproduct material as defined by the Atomic Energy Act of 1954 (42 USC Section 2011 et seq.) as amended from time to time.

36. *Resident Project Representative*—The authorized representative of Engineer who may be assigned to the Site or any part thereof.

37. *Samples*—Physical examples of materials, equipment, or workmanship that are representative of some portion of the Work and which establish the standards by which such portion of the Work will be judged.

38. *Schedule of Submittals*—A schedule, prepared and maintained by Contractor, of required submittals and the time requirements to support scheduled performance of related construction activities.

39. *Schedule of Values*—A schedule, prepared and maintained by Contractor, allocating portions of the Contract Price to various portions of the Work and used as the basis for reviewing Contractor's Applications for Payment.

Copyright © 2007 National Society of Professional Engineers for EJCDC. All rights reserved.

40. *Shop Drawings*—All drawings, diagrams, illustrations, schedules, and other data or information which are specifically prepared or assembled by or for Contractor and submitted by Contractor to illustrate some portion of the Work.

41. *Site*—Lands or areas indicated in the Contract Documents as being furnished by Owner upon which the Work is to be performed, including rights-of-way and easements for access thereto, and such other lands furnished by Owner which are designated for the use of Contractor.

42. *Specifications*—That part of the Contract Documents consisting of written requirements for materials, equipment, systems, standards and workmanship as applied to the Work, and certain administrative requirements and procedural matters applicable thereto.

43. *Subcontractor*—An individual or entity having a direct contract with Contractor or with any other Subcontractor for the performance of a part of the Work at the Site.

44. *Substantial Completion*—The time at which the Work (or a specified part thereof) has progressed to the point where, in the opinion of Engineer, the Work (or a specified part thereof) is sufficiently complete, in accordance with the Contract Documents, so that the Work (or a specified part thereof) can be utilized for the purposes for which it is intended. The terms "substantially complete" and "substantially completed" as applied to all or part of the Work refer to Substantial Completion thereof.

45. *Successful Bidder*—The Bidder submitting a responsive Bid to whom Owner makes an award.

46. *Supplementary Conditions*—That part of the Contract Documents which amends or supplements these General Conditions.

47. *Supplier*—A manufacturer, fabricator, supplier, distributor, materialman, or vendor having a direct contract with Contractor or with any Subcontractor to furnish materials or equipment to be incorporated in the Work by Contractor or Subcontractor.

48. *Underground Facilities*—All underground pipelines, conduits, ducts, cables, wires, manholes, vaults, tanks, tunnels, or other such facilities or attachments, and any encasements containing such facilities, including those that convey electricity, gases, steam, liquid petroleum products, telephone or other communications, cable television, water, wastewater, storm water, other liquids or chemicals, or traffic or other control systems.

49. *Unit Price Work*—Work to be paid for on the basis of unit prices.

50. *Work*—The entire construction or the various separately identifiable parts thereof required to be provided under the Contract Documents. Work includes and is the result of performing or providing all labor, services, and documentation necessary to produce such construction, and furnishing, installing, and incorporating all materials and equipment into such construction, all as required by the Contract Documents.

51. *Work Change Directive*—A written statement to Contractor issued on or after the Effective Date of the Agreement and signed by Owner and recommended by Engineer ordering an

Copyright © 2007 National Society of Professional Engineers for EJCDC. All rights reserved.

addition, deletion, or revision in the Work, or responding to differing or unforeseen subsurface or physical conditions under which the Work is to be performed or to emergencies. A Work Change Directive will not change the Contract Price or the Contract Times but is evidence that the parties expect that the change ordered or documented by a Work Change Directive will be incorporated in a subsequently issued Change Order following negotiations by the parties as to its effect, if any, on the Contract Price or Contract Times.

1.02 *Terminology*

A. The words and terms discussed in Paragraph 1.02.B through F are not defined but, when used in the Bidding Requirements or Contract Documents, have the indicated meaning.

B. *Intent of Certain Terms or Adjectives:*

1. The Contract Documents include the terms "as allowed," "as approved," "as ordered," "as directed" or terms of like effect or import to authorize an exercise of professional judgment by Engineer. In addition, the adjectives "reasonable," "suitable," "acceptable," "proper," "satisfactory," or adjectives of like effect or import are used to describe an action or determination of Engineer as to the Work. It is intended that such exercise of professional judgment, action, or determination will be solely to evaluate, in general, the Work for compliance with the information in the Contract Documents and with the design concept of the Project as a functioning whole as shown or indicated in the Contract Documents (unless there is a specific statement indicating otherwise). The use of any such term or adjective is not intended to and shall not be effective to assign to Engineer any duty or authority to supervise or direct the performance of the Work, or any duty or authority to undertake responsibility contrary to the provisions of Paragraph 9.09 or any other provision of the Contract Documents.

C. *Day:*

1. The word "day" means a calendar day of 24 hours measured from midnight to the next midnight.

D. *Defective:*

1. The word "defective," when modifying the word "Work," refers to Work that is unsatisfactory, faulty, or deficient in that it:

a. does not conform to the Contract Documents; or

b. does not meet the requirements of any applicable inspection, reference standard, test, or approval referred to in the Contract Documents; or

c. has been damaged prior to Engineer's recommendation of final payment (unless responsibility for the protection thereof has been assumed by Owner at Substantial Completion in accordance with Paragraph 14.04 or 14.05).

E. *Furnish, Install, Perform, Provide:*

Copyright © 2007 National Society of Professional Engineers for EJCDC. All rights reserved.

1. The word "furnish," when used in connection with services, materials, or equipment, shall mean to supply and deliver said services, materials, or equipment to the Site (or some other specified location) ready for use or installation and in usable or operable condition.

2. The word "install," when used in connection with services, materials, or equipment, shall mean to put into use or place in final position said services, materials, or equipment complete and ready for intended use.

3. The words "perform" or "provide," when used in connection with services, materials, or equipment, shall mean to furnish and install said services, materials, or equipment complete and ready for intended use.

4. When "furnish," "install," "perform," or "provide" is not used in connection with services, materials, or equipment in a context clearly requiring an obligation of Contractor, "provide" is implied.

F. Unless stated otherwise in the Contract Documents, words or phrases that have a well-known technical or construction industry or trade meaning are used in the Contract Documents in accordance with such recognized meaning.

ARTICLE 2 – PRELIMINARY MATTERS

2.01 *Delivery of Bonds and Evidence of Insurance*

A. When Contractor delivers the executed counterparts of the Agreement to Owner, Contractor shall also deliver to Owner such bonds as Contractor may be required to furnish.

B. *Evidence of Insurance:* Before any Work at the Site is started, Contractor and Owner shall each deliver to the other, with copies to each additional insured identified in the Supplementary Conditions, certificates of insurance (and other evidence of insurance which either of them or any additional insured may reasonably request) which Contractor and Owner respectively are required to purchase and maintain in accordance with Article 5.

2.02 *Copies of Documents*

A. Owner shall furnish to Contractor up to ten printed or hard copies of the Drawings and Project Manual. Additional copies will be furnished upon request at the cost of reproduction.

2.03 *Commencement of Contract Times; Notice to Proceed*

A. The Contract Times will commence to run on the thirtieth day after the Effective Date of the Agreement or, if a Notice to Proceed is given, on the day indicated in the Notice to Proceed. A Notice to Proceed may be given at any time within 30 days after the Effective Date of the Agreement. In no event will the Contract Times commence to run later than the sixtieth day after the day of Bid opening or the thirtieth day after the Effective Date of the Agreement, whichever date is earlier.

Copyright © 2007 National Society of Professional Engineers for EJCDC. All rights reserved.

2.04 *Starting the Work*

A. Contractor shall start to perform the Work on the date when the Contract Times commence to run. No Work shall be done at the Site prior to the date on which the Contract Times commence to run.

2.05 *Before Starting Construction*

A. *Preliminary Schedules:* Within 10 days after the Effective Date of the Agreement (unless otherwise specified in the General Requirements), Contractor shall submit to Engineer for timely review:

1. a preliminary Progress Schedule indicating the times (numbers of days or dates) for starting and completing the various stages of the Work, including any Milestones specified in the Contract Documents;

2. a preliminary Schedule of Submittals; and

3. a preliminary Schedule of Values for all of the Work which includes quantities and prices of items which when added together equal the Contract Price and subdivides the Work into component parts in sufficient detail to serve as the basis for progress payments during performance of the Work. Such prices will include an appropriate amount of overhead and profit applicable to each item of Work.

2.06 *Preconstruction Conference; Designation of Authorized Representatives*

A. Before any Work at the Site is started, a conference attended by Owner, Contractor, Engineer, and others as appropriate will be held to establish a working understanding among the parties as to the Work and to discuss the schedules referred to in Paragraph 2.05.A, procedures for handling Shop Drawings and other submittals, processing Applications for Payment, and maintaining required records.

B. At this conference Owner and Contractor each shall designate, in writing, a specific individual to act as its authorized representative with respect to the services and responsibilities under the Contract. Such individuals shall have the authority to transmit instructions, receive information, render decisions relative to the Contract, and otherwise act on behalf of each respective party.

2.07 *Initial Acceptance of Schedules*

A. At least 10 days before submission of the first Application for Payment a conference attended by Contractor, Engineer, and others as appropriate will be held to review for acceptability to Engineer as provided below the schedules submitted in accordance with Paragraph 2.05.A. Contractor shall have an additional 10 days to make corrections and adjustments and to complete and resubmit the schedules. No progress payment shall be made to Contractor until acceptable schedules are submitted to Engineer.

1. The Progress Schedule will be acceptable to Engineer if it provides an orderly progression of the Work to completion within the Contract Times. Such acceptance will not impose on Engineer responsibility for the Progress Schedule, for sequencing, scheduling, or progress of

Copyright © 2007 National Society of Professional Engineers for EJCDC. All rights reserved.

the Work, nor interfere with or relieve Contractor from Contractor's full responsibility therefor.

2. Contractor's Schedule of Submittals will be acceptable to Engineer if it provides a workable arrangement for reviewing and processing the required submittals.

3. Contractor's Schedule of Values will be acceptable to Engineer as to form and substance if it provides a reasonable allocation of the Contract Price to component parts of the Work.

ARTICLE 3 – CONTRACT DOCUMENTS: INTENT, AMENDING, REUSE

3.01 *Intent*

A. The Contract Documents are complementary; what is required by one is as binding as if required by all.

B. It is the intent of the Contract Documents to describe a functionally complete project (or part thereof) to be constructed in accordance with the Contract Documents. Any labor, documentation, services, materials, or equipment that reasonably may be inferred from the Contract Documents or from prevailing custom or trade usage as being required to produce the indicated result will be provided whether or not specifically called for, at no additional cost to Owner.

C. Clarifications and interpretations of the Contract Documents shall be issued by Engineer as provided in Article 9.

3.02 *Reference Standards*

A. Standards, Specifications, Codes, Laws, and Regulations

1. Reference to standards, specifications, manuals, or codes of any technical society, organization, or association, or to Laws or Regulations, whether such reference be specific or by implication, shall mean the standard, specification, manual, code, or Laws or Regulations in effect at the time of opening of Bids (or on the Effective Date of the Agreement if there were no Bids), except as may be otherwise specifically stated in the Contract Documents.

2. No provision of any such standard, specification, manual, or code, or any instruction of a Supplier, shall be effective to change the duties or responsibilities of Owner, Contractor, or Engineer, or any of their subcontractors, consultants, agents, or employees, from those set forth in the Contract Documents. No such provision or instruction shall be effective to assign to Owner, Engineer, or any of their officers, directors, members, partners, employees, agents, consultants, or subcontractors, any duty or authority to supervise or direct the performance of the Work or any duty or authority to undertake responsibility inconsistent with the provisions of the Contract Documents.

3.03 *Reporting and Resolving Discrepancies*

A. *Reporting Discrepancies:*

Copyright © 2007 National Society of Professional Engineers for EJCDC. All rights reserved.

1. *Contractor's Review of Contract Documents Before Starting Work*: Before undertaking each part of the Work, Contractor shall carefully study and compare the Contract Documents and check and verify pertinent figures therein and all applicable field measurements. Contractor shall promptly report in writing to Engineer any conflict, error, ambiguity, or discrepancy which Contractor discovers, or has actual knowledge of, and shall obtain a written interpretation or clarification from Engineer before proceeding with any Work affected thereby.

2. *Contractor's Review of Contract Documents During Performance of Work*: If, during the performance of the Work, Contractor discovers any conflict, error, ambiguity, or discrepancy within the Contract Documents, or between the Contract Documents and (a) any applicable Law or Regulation , (b) any standard, specification, manual, or code, or (c) any instruction of any Supplier, then Contractor shall promptly report it to Engineer in writing. Contractor shall not proceed with the Work affected thereby (except in an emergency as required by Paragraph 6.16.A) until an amendment or supplement to the Contract Documents has been issued by one of the methods indicated in Paragraph 3.04.

3. Contractor shall not be liable to Owner or Engineer for failure to report any conflict, error, ambiguity, or discrepancy in the Contract Documents unless Contractor had actual knowledge thereof.

B. *Resolving Discrepancies:*

1. Except as may be otherwise specifically stated in the Contract Documents, the provisions of the Contract Documents shall take precedence in resolving any conflict, error, ambiguity, or discrepancy between the provisions of the Contract Documents and:

   a. the provisions of any standard, specification, manual, or code, or the instruction of any Supplier (whether or not specifically incorporated by reference in the Contract Documents); or

   b. the provisions of any Laws or Regulations applicable to the performance of the Work (unless such an interpretation of the provisions of the Contract Documents would result in violation of such Law or Regulation).

3.04 *Amending and Supplementing Contract Documents*

A. The Contract Documents may be amended to provide for additions, deletions, and revisions in the Work or to modify the terms and conditions thereof by either a Change Order or a Work Change Directive.

B. The requirements of the Contract Documents may be supplemented, and minor variations and deviations in the Work may be authorized, by one or more of the following ways:

1. A Field Order;

2. Engineer's approval of a Shop Drawing or Sample (subject to the provisions of Paragraph 6.17.D.3); or

Copyright © 2007 National Society of Professional Engineers for EJCDC. All rights reserved.

3. Engineer's written interpretation or clarification.

3.05 *Reuse of Documents*

A. Contractor and any Subcontractor or Supplier shall not:

1. have or acquire any title to or ownership rights in any of the Drawings, Specifications, or other documents (or copies of any thereof) prepared by or bearing the seal of Engineer or its consultants, including electronic media editions; or

2. reuse any such Drawings, Specifications, other documents, or copies thereof on extensions of the Project or any other project without written consent of Owner and Engineer and specific written verification or adaptation by Engineer.

B. The prohibitions of this Paragraph 3.05 will survive final payment, or termination of the Contract. Nothing herein shall preclude Contractor from retaining copies of the Contract Documents for record purposes.

3.06 *Electronic Data*

A. Unless otherwise stated in the Supplementary Conditions, the data furnished by Owner or Engineer to Contractor, or by Contractor to Owner or Engineer, that may be relied upon are limited to the printed copies (also known as hard copies). Files in electronic media format of text, data, graphics, or other types are furnished only for the convenience of the receiving party. Any conclusion or information obtained or derived from such electronic files will be at the user's sole risk. If there is a discrepancy between the electronic files and the hard copies, the hard copies govern.

B. Because data stored in electronic media format can deteriorate or be modified inadvertently or otherwise without authorization of the data's creator, the party receiving electronic files agrees that it will perform acceptance tests or procedures within 60 days, after which the receiving party shall be deemed to have accepted the data thus transferred. Any errors detected within the 60-day acceptance period will be corrected by the transferring party.

C. When transferring documents in electronic media format, the transferring party makes no representations as to long term compatibility, usability, or readability of documents resulting from the use of software application packages, operating systems, or computer hardware differing from those used by the data's creator.

ARTICLE 4 – AVAILABILITY OF LANDS; SUBSURFACE AND PHYSICAL CONDITIONS; HAZARDOUS ENVIRONMENTAL CONDITIONS; REFERENCE POINTS

4.01 *Availability of Lands*

A. Owner shall furnish the Site. Owner shall notify Contractor of any encumbrances or restrictions not of general application but specifically related to use of the Site with which Contractor must comply in performing the Work. Owner will obtain in a timely manner and pay for easements for permanent structures or permanent changes in existing facilities. If Contractor and Owner are unable to agree on entitlement to or on the amount or extent, if any, of any adjustment in the

Copyright © 2007 National Society of Professional Engineers for EJCDC. All rights reserved.

Contract Price or Contract Times, or both, as a result of any delay in Owner's furnishing the Site or a part thereof, Contractor may make a Claim therefor as provided in Paragraph 10.05.

B. Upon reasonable written request, Owner shall furnish Contractor with a current statement of record legal title and legal description of the lands upon which the Work is to be performed and Owner's interest therein as necessary for giving notice of or filing a mechanic's or construction lien against such lands in accordance with applicable Laws and Regulations.

C. Contractor shall provide for all additional lands and access thereto that may be required for temporary construction facilities or storage of materials and equipment.

4.02 *Subsurface and Physical Conditions*

A. *Reports and Drawings:* The Supplementary Conditions identify:

1. those reports known to Owner of explorations and tests of subsurface conditions at or contiguous to the Site; and

2. those drawings known to Owner of physical conditions relating to existing surface or subsurface structures at the Site (except Underground Facilities).

B. *Limited Reliance by Contractor on Technical Data Authorized:* Contractor may rely upon the accuracy of the "technical data" contained in such reports and drawings, but such reports and drawings are not Contract Documents. Such "technical data" is identified in the Supplementary Conditions. Except for such reliance on such "technical data," Contractor may not rely upon or make any claim against Owner or Engineer, or any of their officers, directors, members, partners, employees, agents, consultants, or subcontractors with respect to:

1. the completeness of such reports and drawings for Contractor's purposes, including, but not limited to, any aspects of the means, methods, techniques, sequences, and procedures of construction to be employed by Contractor, and safety precautions and programs incident thereto; or

2. other data, interpretations, opinions, and information contained in such reports or shown or indicated in such drawings; or

3. any Contractor interpretation of or conclusion drawn from any "technical data" or any such other data, interpretations, opinions, or information.

4.03 *Differing Subsurface or Physical Conditions*

A. *Notice:* If Contractor believes that any subsurface or physical condition that is uncovered or revealed either:

1. is of such a nature as to establish that any "technical data" on which Contractor is entitled to rely as provided in Paragraph 4.02 is materially inaccurate; or

2. is of such a nature as to require a change in the Contract Documents; or

Copyright © 2007 National Society of Professional Engineers for EJCDC. All rights reserved.

3. differs materially from that shown or indicated in the Contract Documents; or

4. is of an unusual nature, and differs materially from conditions ordinarily encountered and generally recognized as inherent in work of the character provided for in the Contract Documents;

then Contractor shall, promptly after becoming aware thereof and before further disturbing the subsurface or physical conditions or performing any Work in connection therewith (except in an emergency as required by Paragraph 6.16.A), notify Owner and Engineer in writing about such condition. Contractor shall not further disturb such condition or perform any Work in connection therewith (except as aforesaid) until receipt of written order to do so.

B. *Engineer's Review*: After receipt of written notice as required by Paragraph 4.03.A, Engineer will promptly review the pertinent condition, determine the necessity of Owner's obtaining additional exploration or tests with respect thereto, and advise Owner in writing (with a copy to Contractor) of Engineer's findings and conclusions.

C. *Possible Price and Times Adjustments:*

1. The Contract Price or the Contract Times, or both, will be equitably adjusted to the extent that the existence of such differing subsurface or physical condition causes an increase or decrease in Contractor's cost of, or time required for, performance of the Work; subject, however, to the following:

   a. such condition must meet any one or more of the categories described in Paragraph 4.03.A; and

   b. with respect to Work that is paid for on a unit price basis, any adjustment in Contract Price will be subject to the provisions of Paragraphs 9.07 and 11.03.

2. Contractor shall not be entitled to any adjustment in the Contract Price or Contract Times if:

   a. Contractor knew of the existence of such conditions at the time Contractor made a final commitment to Owner with respect to Contract Price and Contract Times by the submission of a Bid or becoming bound under a negotiated contract; or

   b. the existence of such condition could reasonably have been discovered or revealed as a result of any examination, investigation, exploration, test, or study of the Site and contiguous areas required by the Bidding Requirements or Contract Documents to be conducted by or for Contractor prior to Contractor's making such final commitment; or

   c. Contractor failed to give the written notice as required by Paragraph 4.03.A.

3. If Owner and Contractor are unable to agree on entitlement to or on the amount or extent, if any, of any adjustment in the Contract Price or Contract Times, or both, a Claim may be made therefor as provided in Paragraph 10.05. However, neither Owner or Engineer, or any of their officers, directors, members, partners, employees, agents, consultants, or subcontractors shall be liable to Contractor for any claims, costs, losses, or damages (including but not limited to all fees and charges of engineers, architects, attorneys, and other

Copyright © 2007 National Society of Professional Engineers for EJCDC. All rights reserved.

professionals and all court or arbitration or other dispute resolution costs) sustained by Contractor on or in connection with any other project or anticipated project.

4.04 *Underground Facilities*

A. *Shown or Indicated:* The information and data shown or indicated in the Contract Documents with respect to existing Underground Facilities at or contiguous to the Site is based on information and data furnished to Owner or Engineer by the owners of such Underground Facilities, including Owner, or by others. Unless it is otherwise expressly provided in the Supplementary Conditions:

1. Owner and Engineer shall not be responsible for the accuracy or completeness of any such information or data provided by others; and

2. the cost of all of the following will be included in the Contract Price, and Contractor shall have full responsibility for:

   a. reviewing and checking all such information and data;

   b. locating all Underground Facilities shown or indicated in the Contract Documents;

   c. coordination of the Work with the owners of such Underground Facilities, including Owner, during construction; and

   d. the safety and protection of all such Underground Facilities and repairing any damage thereto resulting from the Work.

B. *Not Shown or Indicated:*

1. If an Underground Facility is uncovered or revealed at or contiguous to the Site which was not shown or indicated, or not shown or indicated with reasonable accuracy in the Contract Documents, Contractor shall, promptly after becoming aware thereof and before further disturbing conditions affected thereby or performing any Work in connection therewith (except in an emergency as required by Paragraph 6.16.A), identify the owner of such Underground Facility and give written notice to that owner and to Owner and Engineer. Engineer will promptly review the Underground Facility and determine the extent, if any, to which a change is required in the Contract Documents to reflect and document the consequences of the existence or location of the Underground Facility. During such time, Contractor shall be responsible for the safety and protection of such Underground Facility.

2. If Engineer concludes that a change in the Contract Documents is required, a Work Change Directive or a Change Order will be issued to reflect and document such consequences. An equitable adjustment shall be made in the Contract Price or Contract Times, or both, to the extent that they are attributable to the existence or location of any Underground Facility that was not shown or indicated or not shown or indicated with reasonable accuracy in the Contract Documents and that Contractor did not know of and could not reasonably have been expected to be aware of or to have anticipated. If Owner and Contractor are unable to agree on entitlement to or on the amount or extent, if any, of any such adjustment in Contract Price

Copyright © 2007 National Society of Professional Engineers for EJCDC. All rights reserved.

or Contract Times, Owner or Contractor may make a Claim therefor as provided in Paragraph 10.05.

4.05 *Reference Points*

A. Owner shall provide engineering surveys to establish reference points for construction which in Engineer's judgment are necessary to enable Contractor to proceed with the Work. Contractor shall be responsible for laying out the Work, shall protect and preserve the established reference points and property monuments, and shall make no changes or relocations without the prior written approval of Owner. Contractor shall report to Engineer whenever any reference point or property monument is lost or destroyed or requires relocation because of necessary changes in grades or locations, and shall be responsible for the accurate replacement or relocation of such reference points or property monuments by professionally qualified personnel.

4.06 *Hazardous Environmental Condition at Site*

A. *Reports and Drawings:* The Supplementary Conditions identify those reports and drawings known to Owner relating to Hazardous Environmental Conditions that have been identified at the Site.

B. *Limited Reliance by Contractor on Technical Data Authorized:* Contractor may rely upon the accuracy of the "technical data" contained in such reports and drawings, but such reports and drawings are not Contract Documents. Such "technical data" is identified in the Supplementary Conditions. Except for such reliance on such "technical data," Contractor may not rely upon or make any claim against Owner or Engineer, or any of their officers, directors, members, partners, employees, agents, consultants, or subcontractors with respect to:

1. the completeness of such reports and drawings for Contractor's purposes, including, but not limited to, any aspects of the means, methods, techniques, sequences and procedures of construction to be employed by Contractor and safety precautions and programs incident thereto; or

2. other data, interpretations, opinions and information contained in such reports or shown or indicated in such drawings; or

3. any Contractor interpretation of or conclusion drawn from any "technical data" or any such other data, interpretations, opinions or information.

C. Contractor shall not be responsible for any Hazardous Environmental Condition uncovered or revealed at the Site which was not shown or indicated in Drawings or Specifications or identified in the Contract Documents to be within the scope of the Work. Contractor shall be responsible for a Hazardous Environmental Condition created with any materials brought to the Site by Contractor, Subcontractors, Suppliers, or anyone else for whom Contractor is responsible.

D. If Contractor encounters a Hazardous Environmental Condition or if Contractor or anyone for whom Contractor is responsible creates a Hazardous Environmental Condition, Contractor shall immediately: (i) secure or otherwise isolate such condition; (ii) stop all Work in connection with such condition and in any area affected thereby (except in an emergency as required by

Copyright © 2007 National Society of Professional Engineers for EJCDC. All rights reserved.

Paragraph 6.16.A); and (iii) notify Owner and Engineer (and promptly thereafter confirm such notice in writing). Owner shall promptly consult with Engineer concerning the necessity for Owner to retain a qualified expert to evaluate such condition or take corrective action, if any. Promptly after consulting with Engineer, Owner shall take such actions as are necessary to permit Owner to timely obtain required permits and provide Contractor the written notice required by Paragraph 4.06.E.

E. Contractor shall not be required to resume Work in connection with such condition or in any affected area until after Owner has obtained any required permits related thereto and delivered written notice to Contractor: (i) specifying that such condition and any affected area is or has been rendered safe for the resumption of Work; or (ii) specifying any special conditions under which such Work may be resumed safely. If Owner and Contractor cannot agree as to entitlement to or on the amount or extent, if any, of any adjustment in Contract Price or Contract Times, or both, as a result of such Work stoppage or such special conditions under which Work is agreed to be resumed by Contractor, either party may make a Claim therefor as provided in Paragraph 10.05.

F. If after receipt of such written notice Contractor does not agree to resume such Work based on a reasonable belief it is unsafe, or does not agree to resume such Work under such special conditions, then Owner may order the portion of the Work that is in the area affected by such condition to be deleted from the Work. If Owner and Contractor cannot agree as to entitlement to or on the amount or extent, if any, of an adjustment in Contract Price or Contract Times as a result of deleting such portion of the Work, then either party may make a Claim therefor as provided in Paragraph 10.05. Owner may have such deleted portion of the Work performed by Owner's own forces or others in accordance with Article 7.

G. To the fullest extent permitted by Laws and Regulations, Owner shall indemnify and hold harmless Contractor, Subcontractors, and Engineer, and the officers, directors, members, partners, employees, agents, consultants, and subcontractors of each and any of them from and against all claims, costs, losses, and damages (including but not limited to all fees and charges of engineers, architects, attorneys, and other professionals and all court or arbitration or other dispute resolution costs) arising out of or relating to a Hazardous Environmental Condition, provided that such Hazardous Environmental Condition: (i) was not shown or indicated in the Drawings or Specifications or identified in the Contract Documents to be included within the scope of the Work, and (ii) was not created by Contractor or by anyone for whom Contractor is responsible. Nothing in this Paragraph 4.06.G shall obligate Owner to indemnify any individual or entity from and against the consequences of that individual's or entity's own negligence.

H. To the fullest extent permitted by Laws and Regulations, Contractor shall indemnify and hold harmless Owner and Engineer, and the officers, directors, members, partners, employees, agents, consultants, and subcontractors of each and any of them from and against all claims, costs, losses, and damages (including but not limited to all fees and charges of engineers, architects, attorneys, and other professionals and all court or arbitration or other dispute resolution costs) arising out of or relating to a Hazardous Environmental Condition created by Contractor or by anyone for whom Contractor is responsible. Nothing in this Paragraph 4.06.H shall obligate Contractor to indemnify any individual or entity from and against the consequences of that individual's or entity's own negligence.

Copyright © 2007 National Society of Professional Engineers for EJCDC. All rights reserved.

I. The provisions of Paragraphs 4.02, 4.03, and 4.04 do not apply to a Hazardous Environmental Condition uncovered or revealed at the Site.

ARTICLE 5 – BONDS AND INSURANCE

5.01 *Performance, Payment, and Other Bonds*

A. Contractor shall furnish performance and payment bonds, each in an amount at least equal to the Contract Price as security for the faithful performance and payment of all of Contractor's obligations under the Contract Documents. These bonds shall remain in effect until one year after the date when final payment becomes due or until completion of the correction period specified in Paragraph 13.07, whichever is later, except as provided otherwise by Laws or Regulations or by the Contract Documents. Contractor shall also furnish such other bonds as are required by the Contract Documents.

B. All bonds shall be in the form prescribed by the Contract Documents except as provided otherwise by Laws or Regulations, and shall be executed by such sureties as are named in the list of "Companies Holding Certificates of Authority as Acceptable Sureties on Federal Bonds and as Acceptable Reinsuring Companies" as published in Circular 570 (amended) by the Financial Management Service, Surety Bond Branch, U.S. Department of the Treasury. All bonds signed by an agent or attorney-in-fact must be accompanied by a certified copy of that individual's authority to bind the surety. The evidence of authority shall show that it is effective on the date the agent or attorney-in-fact signed each bond.

C. If the surety on any bond furnished by Contractor is declared bankrupt or becomes insolvent or its right to do business is terminated in any state where any part of the Project is located or it ceases to meet the requirements of Paragraph 5.01.B, Contractor shall promptly notify Owner and Engineer and shall, within 20 days after the event giving rise to such notification, provide another bond and surety, both of which shall comply with the requirements of Paragraphs 5.01.B and 5.02.

5.02 *Licensed Sureties and Insurers*

A. All bonds and insurance required by the Contract Documents to be purchased and maintained by Owner or Contractor shall be obtained from surety or insurance companies that are duly licensed or authorized in the jurisdiction in which the Project is located to issue bonds or insurance policies for the limits and coverages so required. Such surety and insurance companies shall also meet such additional requirements and qualifications as may be provided in the Supplementary Conditions.

5.03 *Certificates of Insurance*

A. Contractor shall deliver to Owner, with copies to each additional insured and loss payee identified in the Supplementary Conditions, certificates of insurance (and other evidence of insurance requested by Owner or any other additional insured) which Contractor is required to purchase and maintain.

Copyright © 2007 National Society of Professional Engineers for EJCDC. All rights reserved.

B. Owner shall deliver to Contractor, with copies to each additional insured and loss payee identified in the Supplementary Conditions, certificates of insurance (and other evidence of insurance requested by Contractor or any other additional insured) which Owner is required to purchase and maintain.

C. Failure of Owner to demand such certificates or other evidence of Contractor's full compliance with these insurance requirements or failure of Owner to identify a deficiency in compliance from the evidence provided shall not be construed as a waiver of Contractor's obligation to maintain such insurance.

D. Owner does not represent that insurance coverage and limits established in this Contract necessarily will be adequate to protect Contractor.

E. The insurance and insurance limits required herein shall not be deemed as a limitation on Contractor's liability under the indemnities granted to Owner in the Contract Documents.

5.04 *Contractor's Insurance*

A. Contractor shall purchase and maintain such insurance as is appropriate for the Work being performed and as will provide protection from claims set forth below which may arise out of or result from Contractor's performance of the Work and Contractor's other obligations under the Contract Documents, whether it is to be performed by Contractor, any Subcontractor or Supplier, or by anyone directly or indirectly employed by any of them to perform any of the Work, or by anyone for whose acts any of them may be liable:

1. claims under workers' compensation, disability benefits, and other similar employee benefit acts;

2. claims for damages because of bodily injury, occupational sickness or disease, or death of Contractor's employees;

3. claims for damages because of bodily injury, sickness or disease, or death of any person other than Contractor's employees;

4. claims for damages insured by reasonably available personal injury liability coverage which are sustained:

   a. by any person as a result of an offense directly or indirectly related to the employment of such person by Contractor, or

   b. by any other person for any other reason;

5. claims for damages, other than to the Work itself, because of injury to or destruction of tangible property wherever located, including loss of use resulting therefrom; and

6. claims for damages because of bodily injury or death of any person or property damage arising out of the ownership, maintenance or use of any motor vehicle.

B. The policies of insurance required by this Paragraph 5.04 shall:

Copyright © 2007 National Society of Professional Engineers for EJCDC. All rights reserved.

1. with respect to insurance required by Paragraphs 5.04.A.3 through 5.04.A.6 inclusive, be written on an occurrence basis, include as additional insureds (subject to any customary exclusion regarding professional liability) Owner and Engineer, and any other individuals or entities identified in the Supplementary Conditions, all of whom shall be listed as additional insureds, and include coverage for the respective officers, directors, members, partners, employees, agents, consultants, and subcontractors of each and any of all such additional insureds, and the insurance afforded to these additional insureds shall provide primary coverage for all claims covered thereby;

2. include at least the specific coverages and be written for not less than the limits of liability provided in the Supplementary Conditions or required by Laws or Regulations, whichever is greater;

3. include contractual liability insurance covering Contractor's indemnity obligations under Paragraphs 6.11 and 6.20;

4. contain a provision or endorsement that the coverage afforded will not be canceled, materially changed or renewal refused until at least 30 days prior written notice has been given to Owner and Contractor and to each other additional insured identified in the Supplementary Conditions to whom a certificate of insurance has been issued (and the certificates of insurance furnished by the Contractor pursuant to Paragraph 5.03 will so provide);

5. remain in effect at least until final payment and at all times thereafter when Contractor may be correcting, removing, or replacing defective Work in accordance with Paragraph 13.07; and

6. include completed operations coverage:

    a. Such insurance shall remain in effect for two years after final payment.

    b. Contractor shall furnish Owner and each other additional insured identified in the Supplementary Conditions, to whom a certificate of insurance has been issued, evidence satisfactory to Owner and any such additional insured of continuation of such insurance at final payment and one year thereafter.

5.05 *Owner's Liability Insurance*

A. In addition to the insurance required to be provided by Contractor under Paragraph 5.04, Owner, at Owner's option, may purchase and maintain at Owner's expense Owner's own liability insurance as will protect Owner against claims which may arise from operations under the Contract Documents.

5.06 *Property Insurance*

A. Unless otherwise provided in the Supplementary Conditions, Owner shall purchase and maintain property insurance upon the Work at the Site in the amount of the full replacement cost thereof (subject to such deductible amounts as may be provided in the Supplementary Conditions or required by Laws and Regulations). This insurance shall:

Copyright © 2007 National Society of Professional Engineers for EJCDC. All rights reserved.

1. include the interests of Owner, Contractor, Subcontractors, and Engineer, and any other individuals or entities identified in the Supplementary Conditions, and the officers, directors, members, partners, employees, agents, consultants, and subcontractors of each and any of them, each of whom is deemed to have an insurable interest and shall be listed as a loss payee;

2. be written on a Builder's Risk "all-risk" policy form that shall at least include insurance for physical loss or damage to the Work, temporary buildings, falsework, and materials and equipment in transit, and shall insure against at least the following perils or causes of loss: fire, lightning, extended coverage, theft, vandalism and malicious mischief, earthquake, collapse, debris removal, demolition occasioned by enforcement of Laws and Regulations, water damage (other than that caused by flood), and such other perils or causes of loss as may be specifically required by the Supplementary Conditions.

3. include expenses incurred in the repair or replacement of any insured property (including but not limited to fees and charges of engineers and architects);

4. cover materials and equipment stored at the Site or at another location that was agreed to in writing by Owner prior to being incorporated in the Work, provided that such materials and equipment have been included in an Application for Payment recommended by Engineer;

5. allow for partial utilization of the Work by Owner;

6. include testing and startup; and

7. be maintained in effect until final payment is made unless otherwise agreed to in writing by Owner, Contractor, and Engineer with 30 days written notice to each other loss payee to whom a certificate of insurance has been issued.

B. Owner shall purchase and maintain such equipment breakdown insurance or additional property insurance as may be required by the Supplementary Conditions or Laws and Regulations which will include the interests of Owner, Contractor, Subcontractors, and Engineer, and any other individuals or entities identified in the Supplementary Conditions, and the officers, directors, members, partners, employees, agents, consultants and subcontractors of each and any of them, each of whom is deemed to have an insurable interest and shall be listed as a loss payee.

C. All the policies of insurance (and the certificates or other evidence thereof) required to be purchased and maintained in accordance with this Paragraph 5.06 will contain a provision or endorsement that the coverage afforded will not be canceled or materially changed or renewal refused until at least 30 days prior written notice has been given to Owner and Contractor and to each other loss payee to whom a certificate of insurance has been issued and will contain waiver provisions in accordance with Paragraph 5.07.

D. Owner shall not be responsible for purchasing and maintaining any property insurance specified in this Paragraph 5.06 to protect the interests of Contractor, Subcontractors, or others in the Work to the extent of any deductible amounts that are identified in the Supplementary Conditions. The risk of loss within such identified deductible amount will be borne by Contractor, Subcontractors, or others suffering any such loss, and if any of them wishes property

Copyright © 2007 National Society of Professional Engineers for EJCDC. All rights reserved.

insurance coverage within the limits of such amounts, each may purchase and maintain it at the purchaser's own expense.

E. If Contractor requests in writing that other special insurance be included in the property insurance policies provided under this Paragraph 5.06, Owner shall, if possible, include such insurance, and the cost thereof will be charged to Contractor by appropriate Change Order. Prior to commencement of the Work at the Site, Owner shall in writing advise Contractor whether or not such other insurance has been procured by Owner.

5.07 *Waiver of Rights*

A. Owner and Contractor intend that all policies purchased in accordance with Paragraph 5.06 will protect Owner, Contractor, Subcontractors, and Engineer, and all other individuals or entities identified in the Supplementary Conditions as loss payees (and the officers, directors, members, partners, employees, agents, consultants, and subcontractors of each and any of them) in such policies and will provide primary coverage for all losses and damages caused by the perils or causes of loss covered thereby. All such policies shall contain provisions to the effect that in the event of payment of any loss or damage the insurers will have no rights of recovery against any of the insureds or loss payees thereunder. Owner and Contractor waive all rights against each other and their respective officers, directors, members, partners, employees, agents, consultants and subcontractors of each and any of them for all losses and damages caused by, arising out of or resulting from any of the perils or causes of loss covered by such policies and any other property insurance applicable to the Work; and, in addition, waive all such rights against Subcontractors and Engineer, and all other individuals or entities identified in the Supplementary Conditions as loss payees (and the officers, directors, members, partners, employees, agents, consultants, and subcontractors of each and any of them) under such policies for losses and damages so caused. None of the above waivers shall extend to the rights that any party making such waiver may have to the proceeds of insurance held by Owner as trustee or otherwise payable under any policy so issued.

B. Owner waives all rights against Contractor, Subcontractors, and Engineer, and the officers, directors, members, partners, employees, agents, consultants and subcontractors of each and any of them for:

1. loss due to business interruption, loss of use, or other consequential loss extending beyond direct physical loss or damage to Owner's property or the Work caused by, arising out of, or resulting from fire or other perils whether or not insured by Owner; and

2. loss or damage to the completed Project or part thereof caused by, arising out of, or resulting from fire or other insured peril or cause of loss covered by any property insurance maintained on the completed Project or part thereof by Owner during partial utilization pursuant to Paragraph 14.05, after Substantial Completion pursuant to Paragraph 14.04, or after final payment pursuant to Paragraph 14.07.

C. Any insurance policy maintained by Owner covering any loss, damage or consequential loss referred to in Paragraph 5.07.B shall contain provisions to the effect that in the event of payment of any such loss, damage, or consequential loss, the insurers will have no rights of recovery

Copyright © 2007 National Society of Professional Engineers for EJCDC. All rights reserved.

against Contractor, Subcontractors, or Engineer, and the officers, directors, members, partners, employees, agents, consultants and subcontractors of each and any of them.

5.08 *Receipt and Application of Insurance Proceeds*

A. Any insured loss under the policies of insurance required by Paragraph 5.06 will be adjusted with Owner and made payable to Owner as fiduciary for the loss payees, as their interests may appear, subject to the requirements of any applicable mortgage clause and of Paragraph 5.08.B. Owner shall deposit in a separate account any money so received and shall distribute it in accordance with such agreement as the parties in interest may reach. If no other special agreement is reached, the damaged Work shall be repaired or replaced, the moneys so received applied on account thereof, and the Work and the cost thereof covered by an appropriate Change Order.

B. Owner as fiduciary shall have power to adjust and settle any loss with the insurers unless one of the parties in interest shall object in writing within 15 days after the occurrence of loss to Owner's exercise of this power. If such objection be made, Owner as fiduciary shall make settlement with the insurers in accordance with such agreement as the parties in interest may reach. If no such agreement among the parties in interest is reached, Owner as fiduciary shall adjust and settle the loss with the insurers and, if required in writing by any party in interest, Owner as fiduciary shall give bond for the proper performance of such duties.

5.09 *Acceptance of Bonds and Insurance; Option to Replace*

A. If either Owner or Contractor has any objection to the coverage afforded by or other provisions of the bonds or insurance required to be purchased and maintained by the other party in accordance with Article 5 on the basis of non-conformance with the Contract Documents, the objecting party shall so notify the other party in writing within 10 days after receipt of the certificates (or other evidence requested) required by Paragraph 2.01.B. Owner and Contractor shall each provide to the other such additional information in respect of insurance provided as the other may reasonably request. If either party does not purchase or maintain all of the bonds and insurance required of such party by the Contract Documents, such party shall notify the other party in writing of such failure to purchase prior to the start of the Work, or of such failure to maintain prior to any change in the required coverage. Without prejudice to any other right or remedy, the other party may elect to obtain equivalent bonds or insurance to protect such other party's interests at the expense of the party who was required to provide such coverage, and a Change Order shall be issued to adjust the Contract Price accordingly.

5.10 *Partial Utilization, Acknowledgment of Property Insurer*

A. If Owner finds it necessary to occupy or use a portion or portions of the Work prior to Substantial Completion of all the Work as provided in Paragraph 14.05, no such use or occupancy shall commence before the insurers providing the property insurance pursuant to Paragraph 5.06 have acknowledged notice thereof and in writing effected any changes in coverage necessitated thereby. The insurers providing the property insurance shall consent by endorsement on the policy or policies, but the property insurance shall not be canceled or permitted to lapse on account of any such partial use or occupancy.

Copyright © 2007 National Society of Professional Engineers for EJCDC. All rights reserved.

ARTICLE 6 – CONTRACTOR'S RESPONSIBILITIES

6.01 *Supervision and Superintendence*

A. Contractor shall supervise, inspect, and direct the Work competently and efficiently, devoting such attention thereto and applying such skills and expertise as may be necessary to perform the Work in accordance with the Contract Documents. Contractor shall be solely responsible for the means, methods, techniques, sequences, and procedures of construction. Contractor shall not be responsible for the negligence of Owner or Engineer in the design or specification of a specific means, method, technique, sequence, or procedure of construction which is shown or indicated in and expressly required by the Contract Documents.

B. At all times during the progress of the Work, Contractor shall assign a competent resident superintendent who shall not be replaced without written notice to Owner and Engineer except under extraordinary circumstances.

6.02 *Labor; Working Hours*

A. Contractor shall provide competent, suitably qualified personnel to survey and lay out the Work and perform construction as required by the Contract Documents. Contractor shall at all times maintain good discipline and order at the Site.

B. Except as otherwise required for the safety or protection of persons or the Work or property at the Site or adjacent thereto, and except as otherwise stated in the Contract Documents, all Work at the Site shall be performed during regular working hours. Contractor will not permit the performance of Work on a Saturday, Sunday, or any legal holiday without Owner's written consent (which will not be unreasonably withheld) given after prior written notice to Engineer.

6.03 *Services, Materials, and Equipment*

A. Unless otherwise specified in the Contract Documents, Contractor shall provide and assume full responsibility for all services, materials, equipment, labor, transportation, construction equipment and machinery, tools, appliances, fuel, power, light, heat, telephone, water, sanitary facilities, temporary facilities, and all other facilities and incidentals necessary for the performance, testing, start-up, and completion of the Work.

B. All materials and equipment incorporated into the Work shall be as specified or, if not specified, shall be of good quality and new, except as otherwise provided in the Contract Documents. All special warranties and guarantees required by the Specifications shall expressly run to the benefit of Owner. If required by Engineer, Contractor shall furnish satisfactory evidence (including reports of required tests) as to the source, kind, and quality of materials and equipment.

C. All materials and equipment shall be stored, applied, installed, connected, erected, protected, used, cleaned, and conditioned in accordance with instructions of the applicable Supplier, except as otherwise may be provided in the Contract Documents.

Copyright © 2007 National Society of Professional Engineers for EJCDC. All rights reserved.

6.04 *Progress Schedule*

A. Contractor shall adhere to the Progress Schedule established in accordance with Paragraph 2.07 as it may be adjusted from time to time as provided below.

1. Contractor shall submit to Engineer for acceptance (to the extent indicated in Paragraph 2.07) proposed adjustments in the Progress Schedule that will not result in changing the Contract Times. Such adjustments will comply with any provisions of the General Requirements applicable thereto.

2. Proposed adjustments in the Progress Schedule that will change the Contract Times shall be submitted in accordance with the requirements of Article 12. Adjustments in Contract Times may only be made by a Change Order.

6.05 *Substitutes and "Or-Equals"*

A. Whenever an item of material or equipment is specified or described in the Contract Documents by using the name of a proprietary item or the name of a particular Supplier, the specification or description is intended to establish the type, function, appearance, and quality required. Unless the specification or description contains or is followed by words reading that no like, equivalent, or "or-equal" item or no substitution is permitted, other items of material or equipment or material or equipment of other Suppliers may be submitted to Engineer for review under the circumstances described below.

1. *"Or-Equal" Items:* If in Engineer's sole discretion an item of material or equipment proposed by Contractor is functionally equal to that named and sufficiently similar so that no change in related Work will be required, it may be considered by Engineer as an "or-equal" item, in which case review and approval of the proposed item may, in Engineer's sole discretion, be accomplished without compliance with some or all of the requirements for approval of proposed substitute items. For the purposes of this Paragraph 6.05.A.1, a proposed item of material or equipment will be considered functionally equal to an item so named if:

a. in the exercise of reasonable judgment Engineer determines that:

1) it is at least equal in materials of construction, quality, durability, appearance, strength, and design characteristics;

2) it will reliably perform at least equally well the function and achieve the results imposed by the design concept of the completed Project as a functioning whole; and

3) it has a proven record of performance and availability of responsive service.

b. Contractor certifies that, if approved and incorporated into the Work:

1) there will be no increase in cost to the Owner or increase in Contract Times; and

2) it will conform substantially to the detailed requirements of the item named in the Contract Documents.

Copyright © 2007 National Society of Professional Engineers for EJCDC. All rights reserved.

2. *Substitute Items:*

   a. If in Engineer's sole discretion an item of material or equipment proposed by Contractor does not qualify as an "or-equal" item under Paragraph 6.05.A.1, it will be considered a proposed substitute item.

   b. Contractor shall submit sufficient information as provided below to allow Engineer to determine if the item of material or equipment proposed is essentially equivalent to that named and an acceptable substitute therefor. Requests for review of proposed substitute items of material or equipment will not be accepted by Engineer from anyone other than Contractor.

   c. The requirements for review by Engineer will be as set forth in Paragraph 6.05.A.2.d, as supplemented by the General Requirements, and as Engineer may decide is appropriate under the circumstances.

   d. Contractor shall make written application to Engineer for review of a proposed substitute item of material or equipment that Contractor seeks to furnish or use. The application:

      1) shall certify that the proposed substitute item will:

         a) perform adequately the functions and achieve the results called for by the general design,

         b) be similar in substance to that specified, and

         c) be suited to the same use as that specified;

      2) will state:

         a) the extent, if any, to which the use of the proposed substitute item will prejudice Contractor's achievement of Substantial Completion on time,

         b) whether use of the proposed substitute item in the Work will require a change in any of the Contract Documents (or in the provisions of any other direct contract with Owner for other work on the Project) to adapt the design to the proposed substitute item, and

         c) whether incorporation or use of the proposed substitute item in connection with the Work is subject to payment of any license fee or royalty;

      3) will identify:

         a) all variations of the proposed substitute item from that specified, and

         b) available engineering, sales, maintenance, repair, and replacement services; and

Copyright © 2007 National Society of Professional Engineers for EJCDC. All rights reserved.

4) shall contain an itemized estimate of all costs or credits that will result directly or indirectly from use of such substitute item, including costs of redesign and claims of other contractors affected by any resulting change.

B. *Substitute Construction Methods or Procedures:* If a specific means, method, technique, sequence, or procedure of construction is expressly required by the Contract Documents, Contractor may furnish or utilize a substitute means, method, technique, sequence, or procedure of construction approved by Engineer. Contractor shall submit sufficient information to allow Engineer, in Engineer's sole discretion, to determine that the substitute proposed is equivalent to that expressly called for by the Contract Documents. The requirements for review by Engineer will be similar to those provided in Paragraph 6.05.A.2.

C. *Engineer's Evaluation:* Engineer will be allowed a reasonable time within which to evaluate each proposal or submittal made pursuant to Paragraphs 6.05.A and 6.05.B. Engineer may require Contractor to furnish additional data about the proposed substitute item. Engineer will be the sole judge of acceptability. No "or equal" or substitute will be ordered, installed or utilized until Engineer's review is complete, which will be evidenced by a Change Order in the case of a substitute and an approved Shop Drawing for an "or equal." Engineer will advise Contractor in writing of any negative determination.

D. *Special Guarantee:* Owner may require Contractor to furnish at Contractor's expense a special performance guarantee or other surety with respect to any substitute.

E. *Engineer's Cost Reimbursement*: Engineer will record Engineer's costs in evaluating a substitute proposed or submitted by Contractor pursuant to Paragraphs 6.05.A.2 and 6.05.B. Whether or not Engineer approves a substitute so proposed or submitted by Contractor, Contractor shall reimburse Owner for the reasonable charges of Engineer for evaluating each such proposed substitute. Contractor shall also reimburse Owner for the reasonable charges of Engineer for making changes in the Contract Documents (or in the provisions of any other direct contract with Owner) resulting from the acceptance of each proposed substitute.

F. *Contractor's Expense*: Contractor shall provide all data in support of any proposed substitute or "or-equal" at Contractor's expense.

6.06 *Concerning Subcontractors, Suppliers, and Others*

A. Contractor shall not employ any Subcontractor, Supplier, or other individual or entity (including those acceptable to Owner as indicated in Paragraph 6.06.B), whether initially or as a replacement, against whom Owner may have reasonable objection. Contractor shall not be required to employ any Subcontractor, Supplier, or other individual or entity to furnish or perform any of the Work against whom Contractor has reasonable objection.

B. If the Supplementary Conditions require the identity of certain Subcontractors, Suppliers, or other individuals or entities to be submitted to Owner in advance for acceptance by Owner by a specified date prior to the Effective Date of the Agreement, and if Contractor has submitted a list thereof in accordance with the Supplementary Conditions, Owner's acceptance (either in writing or by failing to make written objection thereto by the date indicated for acceptance or objection in the Bidding Documents or the Contract Documents) of any such Subcontractor, Supplier, or

Copyright © 2007 National Society of Professional Engineers for EJCDC. All rights reserved.

other individual or entity so identified may be revoked on the basis of reasonable objection after due investigation. Contractor shall submit an acceptable replacement for the rejected Subcontractor, Supplier, or other individual or entity, and the Contract Price will be adjusted by the difference in the cost occasioned by such replacement, and an appropriate Change Order will be issued. No acceptance by Owner of any such Subcontractor, Supplier, or other individual or entity, whether initially or as a replacement, shall constitute a waiver of any right of Owner or Engineer to reject defective Work.

C. Contractor shall be fully responsible to Owner and Engineer for all acts and omissions of the Subcontractors, Suppliers, and other individuals or entities performing or furnishing any of the Work just as Contractor is responsible for Contractor's own acts and omissions. Nothing in the Contract Documents:

1. shall create for the benefit of any such Subcontractor, Supplier, or other individual or entity any contractual relationship between Owner or Engineer and any such Subcontractor, Supplier or other individual or entity; nor

2. shall create any obligation on the part of Owner or Engineer to pay or to see to the payment of any moneys due any such Subcontractor, Supplier, or other individual or entity except as may otherwise be required by Laws and Regulations.

D. Contractor shall be solely responsible for scheduling and coordinating the Work of Subcontractors, Suppliers, and other individuals or entities performing or furnishing any of the Work under a direct or indirect contract with Contractor.

E. Contractor shall require all Subcontractors, Suppliers, and such other individuals or entities performing or furnishing any of the Work to communicate with Engineer through Contractor.

F. The divisions and sections of the Specifications and the identifications of any Drawings shall not control Contractor in dividing the Work among Subcontractors or Suppliers or delineating the Work to be performed by any specific trade.

G. All Work performed for Contractor by a Subcontractor or Supplier will be pursuant to an appropriate agreement between Contractor and the Subcontractor or Supplier which specifically binds the Subcontractor or Supplier to the applicable terms and conditions of the Contract Documents for the benefit of Owner and Engineer. Whenever any such agreement is with a Subcontractor or Supplier who is listed as a loss payee on the property insurance provided in Paragraph 5.06, the agreement between the Contractor and the Subcontractor or Supplier will contain provisions whereby the Subcontractor or Supplier waives all rights against Owner, Contractor, Engineer, and all other individuals or entities identified in the Supplementary Conditions to be listed as insureds or loss payees (and the officers, directors, members, partners, employees, agents, consultants, and subcontractors of each and any of them) for all losses and damages caused by, arising out of, relating to, or resulting from any of the perils or causes of loss covered by such policies and any other property insurance applicable to the Work. If the insurers on any such policies require separate waiver forms to be signed by any Subcontractor or Supplier, Contractor will obtain the same.

Copyright © 2007 National Society of Professional Engineers for EJCDC. All rights reserved.

6.07 *Patent Fees and Royalties*

A. Contractor shall pay all license fees and royalties and assume all costs incident to the use in the performance of the Work or the incorporation in the Work of any invention, design, process, product, or device which is the subject of patent rights or copyrights held by others. If a particular invention, design, process, product, or device is specified in the Contract Documents for use in the performance of the Work and if, to the actual knowledge of Owner or Engineer, its use is subject to patent rights or copyrights calling for the payment of any license fee or royalty to others, the existence of such rights shall be disclosed by Owner in the Contract Documents.

B. To the fullest extent permitted by Laws and Regulations, Owner shall indemnify and hold harmless Contractor, and its officers, directors, members, partners, employees, agents, consultants, and subcontractors from and against all claims, costs, losses, and damages (including but not limited to all fees and charges of engineers, architects, attorneys, and other professionals, and all court or arbitration or other dispute resolution costs) arising out of or relating to any infringement of patent rights or copyrights incident to the use in the performance of the Work or resulting from the incorporation in the Work of any invention, design, process, product, or device specified in the Contract Documents, but not identified as being subject to payment of any license fee or royalty to others required by patent rights or copyrights.

C. To the fullest extent permitted by Laws and Regulations, Contractor shall indemnify and hold harmless Owner and Engineer, and the officers, directors, members, partners, employees, agents, consultants and subcontractors of each and any of them from and against all claims, costs, losses, and damages (including but not limited to all fees and charges of engineers, architects, attorneys, and other professionals and all court or arbitration or other dispute resolution costs) arising out of or relating to any infringement of patent rights or copyrights incident to the use in the performance of the Work or resulting from the incorporation in the Work of any invention, design, process, product, or device not specified in the Contract Documents.

6.08 *Permits*

A. Unless otherwise provided in the Supplementary Conditions, Contractor shall obtain and pay for all construction permits and licenses. Owner shall assist Contractor, when necessary, in obtaining such permits and licenses. Contractor shall pay all governmental charges and inspection fees necessary for the prosecution of the Work which are applicable at the time of opening of Bids, or, if there are no Bids, on the Effective Date of the Agreement. Owner shall pay all charges of utility owners for connections for providing permanent service to the Work.

6.09 *Laws and Regulations*

A. Contractor shall give all notices required by and shall comply with all Laws and Regulations applicable to the performance of the Work. Except where otherwise expressly required by applicable Laws and Regulations, neither Owner nor Engineer shall be responsible for monitoring Contractor's compliance with any Laws or Regulations.

B. If Contractor performs any Work knowing or having reason to know that it is contrary to Laws or Regulations, Contractor shall bear all claims, costs, losses, and damages (including but not limited to all fees and charges of engineers, architects, attorneys, and other professionals and all

Copyright © 2007 National Society of Professional Engineers for EJCDC. All rights reserved.

court or arbitration or other dispute resolution costs) arising out of or relating to such Work. However, it shall not be Contractor's responsibility to make certain that the Specifications and Drawings are in accordance with Laws and Regulations, but this shall not relieve Contractor of Contractor's obligations under Paragraph 3.03.

C. Changes in Laws or Regulations not known at the time of opening of Bids (or, on the Effective Date of the Agreement if there were no Bids) having an effect on the cost or time of performance of the Work shall be the subject of an adjustment in Contract Price or Contract Times. If Owner and Contractor are unable to agree on entitlement to or on the amount or extent, if any, of any such adjustment, a Claim may be made therefor as provided in Paragraph 10.05.

6.10 *Taxes*

A. Contractor shall pay all sales, consumer, use, and other similar taxes required to be paid by Contractor in accordance with the Laws and Regulations of the place of the Project which are applicable during the performance of the Work.

6.11 *Use of Site and Other Areas*

A. *Limitation on Use of Site and Other Areas:*

1. Contractor shall confine construction equipment, the storage of materials and equipment, and the operations of workers to the Site and other areas permitted by Laws and Regulations, and shall not unreasonably encumber the Site and other areas with construction equipment or other materials or equipment. Contractor shall assume full responsibility for any damage to any such land or area, or to the owner or occupant thereof, or of any adjacent land or areas resulting from the performance of the Work.

2. Should any claim be made by any such owner or occupant because of the performance of the Work, Contractor shall promptly settle with such other party by negotiation or otherwise resolve the claim by arbitration or other dispute resolution proceeding or at law.

3. To the fullest extent permitted by Laws and Regulations, Contractor shall indemnify and hold harmless Owner and Engineer, and the officers, directors, members, partners, employees, agents, consultants and subcontractors of each and any of them from and against all claims, costs, losses, and damages (including but not limited to all fees and charges of engineers, architects, attorneys, and other professionals and all court or arbitration or other dispute resolution costs) arising out of or relating to any claim or action, legal or equitable, brought by any such owner or occupant against Owner, Engineer, or any other party indemnified hereunder to the extent caused by or based upon Contractor's performance of the Work.

B. *Removal of Debris During Performance of the Work:* During the progress of the Work Contractor shall keep the Site and other areas free from accumulations of waste materials, rubbish, and other debris. Removal and disposal of such waste materials, rubbish, and other debris shall conform to applicable Laws and Regulations.

C. *Cleaning:* Prior to Substantial Completion of the Work Contractor shall clean the Site and the Work and make it ready for utilization by Owner. At the completion of the Work Contractor

Copyright © 2007 National Society of Professional Engineers for EJCDC. All rights reserved.

shall remove from the Site all tools, appliances, construction equipment and machinery, and surplus materials and shall restore to original condition all property not designated for alteration by the Contract Documents.

D. *Loading Structures:* Contractor shall not load nor permit any part of any structure to be loaded in any manner that will endanger the structure, nor shall Contractor subject any part of the Work or adjacent property to stresses or pressures that will endanger it.

6.12 *Record Documents*

A. Contractor shall maintain in a safe place at the Site one record copy of all Drawings, Specifications, Addenda, Change Orders, Work Change Directives, Field Orders, and written interpretations and clarifications in good order and annotated to show changes made during construction. These record documents together with all approved Samples and a counterpart of all approved Shop Drawings will be available to Engineer for reference. Upon completion of the Work, these record documents, Samples, and Shop Drawings will be delivered to Engineer for Owner.

6.13 *Safety and Protection*

A. Contractor shall be solely responsible for initiating, maintaining and supervising all safety precautions and programs in connection with the Work. Such responsibility does not relieve Subcontractors of their responsibility for the safety of persons or property in the performance of their work, nor for compliance with applicable safety Laws and Regulations. Contractor shall take all necessary precautions for the safety of, and shall provide the necessary protection to prevent damage, injury or loss to:

1. all persons on the Site or who may be affected by the Work;

2. all the Work and materials and equipment to be incorporated therein, whether in storage on or off the Site; and

3. other property at the Site or adjacent thereto, including trees, shrubs, lawns, walks, pavements, roadways, structures, utilities, and Underground Facilities not designated for removal, relocation, or replacement in the course of construction.

B. Contractor shall comply with all applicable Laws and Regulations relating to the safety of persons or property, or to the protection of persons or property from damage, injury, or loss; and shall erect and maintain all necessary safeguards for such safety and protection. Contractor shall notify owners of adjacent property and of Underground Facilities and other utility owners when prosecution of the Work may affect them, and shall cooperate with them in the protection, removal, relocation, and replacement of their property.

C. Contractor shall comply with the applicable requirements of Owner's safety programs, if any. The Supplementary Conditions identify any Owner's safety programs that are applicable to the Work.

Copyright © 2007 National Society of Professional Engineers for EJCDC. All rights reserved.

D. Contractor shall inform Owner and Engineer of the specific requirements of Contractor's safety program with which Owner's and Engineer's employees and representatives must comply while at the Site.

E. All damage, injury, or loss to any property referred to in Paragraph 6.13.A.2 or 6.13.A.3 caused, directly or indirectly, in whole or in part, by Contractor, any Subcontractor, Supplier, or any other individual or entity directly or indirectly employed by any of them to perform any of the Work, or anyone for whose acts any of them may be liable, shall be remedied by Contractor (except damage or loss attributable to the fault of Drawings or Specifications or to the acts or omissions of Owner or Engineer or anyone employed by any of them, or anyone for whose acts any of them may be liable, and not attributable, directly or indirectly, in whole or in part, to the fault or negligence of Contractor or any Subcontractor, Supplier, or other individual or entity directly or indirectly employed by any of them).

F. Contractor's duties and responsibilities for safety and for protection of the Work shall continue until such time as all the Work is completed and Engineer has issued a notice to Owner and Contractor in accordance with Paragraph 14.07.B that the Work is acceptable (except as otherwise expressly provided in connection with Substantial Completion).

6.14 *Safety Representative*

A. Contractor shall designate a qualified and experienced safety representative at the Site whose duties and responsibilities shall be the prevention of accidents and the maintaining and supervising of safety precautions and programs.

6.15 *Hazard Communication Programs*

A. Contractor shall be responsible for coordinating any exchange of material safety data sheets or other hazard communication information required to be made available to or exchanged between or among employers at the Site in accordance with Laws or Regulations.

6.16 *Emergencies*

A. In emergencies affecting the safety or protection of persons or the Work or property at the Site or adjacent thereto, Contractor is obligated to act to prevent threatened damage, injury, or loss. Contractor shall give Engineer prompt written notice if Contractor believes that any significant changes in the Work or variations from the Contract Documents have been caused thereby or are required as a result thereof. If Engineer determines that a change in the Contract Documents is required because of the action taken by Contractor in response to such an emergency, a Work Change Directive or Change Order will be issued.

6.17 *Shop Drawings and Samples*

A. Contractor shall submit Shop Drawings and Samples to Engineer for review and approval in accordance with the accepted Schedule of Submittals (as required by Paragraph 2.07). Each submittal will be identified as Engineer may require.

Copyright © 2007 National Society of Professional Engineers for EJCDC. All rights reserved.

1. *Shop Drawings:*

    a. Submit number of copies specified in the General Requirements.

    b. Data shown on the Shop Drawings will be complete with respect to quantities, dimensions, specified performance and design criteria, materials, and similar data to show Engineer the services, materials, and equipment Contractor proposes to provide and to enable Engineer to review the information for the limited purposes required by Paragraph 6.17.D.

2. *Samples:*

    a. Submit number of Samples specified in the Specifications.

    b. Clearly identify each Sample as to material, Supplier, pertinent data such as catalog numbers, the use for which intended and other data as Engineer may require to enable Engineer to review the submittal for the limited purposes required by Paragraph 6.17.D.

B. Where a Shop Drawing or Sample is required by the Contract Documents or the Schedule of Submittals, any related Work performed prior to Engineer's review and approval of the pertinent submittal will be at the sole expense and responsibility of Contractor.

C. *Submittal Procedures:*

1. Before submitting each Shop Drawing or Sample, Contractor shall have:

    a. reviewed and coordinated each Shop Drawing or Sample with other Shop Drawings and Samples and with the requirements of the Work and the Contract Documents;

    b. determined and verified all field measurements, quantities, dimensions, specified performance and design criteria, installation requirements, materials, catalog numbers, and similar information with respect thereto;

    c. determined and verified the suitability of all materials offered with respect to the indicated application, fabrication, shipping, handling, storage, assembly, and installation pertaining to the performance of the Work; and

    d. determined and verified all information relative to Contractor's responsibilities for means, methods, techniques, sequences, and procedures of construction, and safety precautions and programs incident thereto.

2. Each submittal shall bear a stamp or specific written certification that Contractor has satisfied Contractor's obligations under the Contract Documents with respect to Contractor's review and approval of that submittal.

3. With each submittal, Contractor shall give Engineer specific written notice of any variations that the Shop Drawing or Sample may have from the requirements of the Contract Documents. This notice shall be both a written communication separate from the Shop

Copyright © 2007 National Society of Professional Engineers for EJCDC. All rights reserved.

Drawings or Sample submittal; and, in addition, by a specific notation made on each Shop Drawing or Sample submitted to Engineer for review and approval of each such variation.

D. *Engineer's Review:*

1. Engineer will provide timely review of Shop Drawings and Samples in accordance with the Schedule of Submittals acceptable to Engineer. Engineer's review and approval will be only to determine if the items covered by the submittals will, after installation or incorporation in the Work, conform to the information given in the Contract Documents and be compatible with the design concept of the completed Project as a functioning whole as indicated by the Contract Documents.

2. Engineer's review and approval will not extend to means, methods, techniques, sequences, or procedures of construction (except where a particular means, method, technique, sequence, or procedure of construction is specifically and expressly called for by the Contract Documents) or to safety precautions or programs incident thereto. The review and approval of a separate item as such will not indicate approval of the assembly in which the item functions.

3. Engineer's review and approval shall not relieve Contractor from responsibility for any variation from the requirements of the Contract Documents unless Contractor has complied with the requirements of Paragraph 6.17.C.3 and Engineer has given written approval of each such variation by specific written notation thereof incorporated in or accompanying the Shop Drawing or Sample. Engineer's review and approval shall not relieve Contractor from responsibility for complying with the requirements of Paragraph 6.17.C.1.

E. *Resubmittal Procedures:*

1. Contractor shall make corrections required by Engineer and shall return the required number of corrected copies of Shop Drawings and submit, as required, new Samples for review and approval. Contractor shall direct specific attention in writing to revisions other than the corrections called for by Engineer on previous submittals.

6.18 *Continuing the Work*

A. Contractor shall carry on the Work and adhere to the Progress Schedule during all disputes or disagreements with Owner. No Work shall be delayed or postponed pending resolution of any disputes or disagreements, except as permitted by Paragraph 15.04 or as Owner and Contractor may otherwise agree in writing.

6.19 *Contractor's General Warranty and Guarantee*

A. Contractor warrants and guarantees to Owner that all Work will be in accordance with the Contract Documents and will not be defective. Engineer and its officers, directors, members, partners, employees, agents, consultants, and subcontractors shall be entitled to rely on representation of Contractor's warranty and guarantee.

B. Contractor's warranty and guarantee hereunder excludes defects or damage caused by:

Copyright © 2007 National Society of Professional Engineers for EJCDC. All rights reserved.

1. abuse, modification, or improper maintenance or operation by persons other than Contractor, Subcontractors, Suppliers, or any other individual or entity for whom Contractor is responsible; or

2. normal wear and tear under normal usage.

C. Contractor's obligation to perform and complete the Work in accordance with the Contract Documents shall be absolute. None of the following will constitute an acceptance of Work that is not in accordance with the Contract Documents or a release of Contractor's obligation to perform the Work in accordance with the Contract Documents:

1. observations by Engineer;

2. recommendation by Engineer or payment by Owner of any progress or final payment;

3. the issuance of a certificate of Substantial Completion by Engineer or any payment related thereto by Owner;

4. use or occupancy of the Work or any part thereof by Owner;

5. any review and approval of a Shop Drawing or Sample submittal or the issuance of a notice of acceptability by Engineer;

6. any inspection, test, or approval by others; or

7. any correction of defective Work by Owner.

6.20 *Indemnification*

A. To the fullest extent permitted by Laws and Regulations, Contractor shall indemnify and hold harmless Owner and Engineer, and the officers, directors, members, partners, employees, agents, consultants and subcontractors of each and any of them from and against all claims, costs, losses, and damages (including but not limited to all fees and charges of engineers, architects, attorneys, and other professionals and all court or arbitration or other dispute resolution costs) arising out of or relating to the performance of the Work, provided that any such claim, cost, loss, or damage is attributable to bodily injury, sickness, disease, or death, or to injury to or destruction of tangible property (other than the Work itself), including the loss of use resulting therefrom but only to the extent caused by any negligent act or omission of Contractor, any Subcontractor, any Supplier, or any individual or entity directly or indirectly employed by any of them to perform any of the Work or anyone for whose acts any of them may be liable .

B. In any and all claims against Owner or Engineer or any of their officers, directors, members, partners, employees, agents, consultants, or subcontractors by any employee (or the survivor or personal representative of such employee) of Contractor, any Subcontractor, any Supplier, or any individual or entity directly or indirectly employed by any of them to perform any of the Work, or anyone for whose acts any of them may be liable, the indemnification obligation under Paragraph 6.20.A shall not be limited in any way by any limitation on the amount or type of damages, compensation, or benefits payable by or for Contractor or any such Subcontractor,

Copyright © 2007 National Society of Professional Engineers for EJCDC. All rights reserved.

Supplier, or other individual or entity under workers' compensation acts, disability benefit acts, or other employee benefit acts.

C. The indemnification obligations of Contractor under Paragraph 6.20.A shall not extend to the liability of Engineer and Engineer's officers, directors, members, partners, employees, agents, consultants and subcontractors arising out of:

1. the preparation or approval of, or the failure to prepare or approve maps, Drawings, opinions, reports, surveys, Change Orders, designs, or Specifications; or

2. giving directions or instructions, or failing to give them, if that is the primary cause of the injury or damage.

6.21 *Delegation of Professional Design Services*

A. Contractor will not be required to provide professional design services unless such services are specifically required by the Contract Documents for a portion of the Work or unless such services are required to carry out Contractor's responsibilities for construction means, methods, techniques, sequences and procedures. Contractor shall not be required to provide professional services in violation of applicable law.

B. If professional design services or certifications by a design professional related to systems, materials or equipment are specifically required of Contractor by the Contract Documents, Owner and Engineer will specify all performance and design criteria that such services must satisfy. Contractor shall cause such services or certifications to be provided by a properly licensed professional, whose signature and seal shall appear on all drawings, calculations, specifications, certifications, Shop Drawings and other submittals prepared by such professional. Shop Drawings and other submittals related to the Work designed or certified by such professional, if prepared by others, shall bear such professional's written approval when submitted to Engineer.

C. Owner and Engineer shall be entitled to rely upon the adequacy, accuracy and completeness of the services, certifications or approvals performed by such design professionals, provided Owner and Engineer have specified to Contractor all performance and design criteria that such services must satisfy.

D. Pursuant to this Paragraph 6.21, Engineer's review and approval of design calculations and design drawings will be only for the limited purpose of checking for conformance with performance and design criteria given and the design concept expressed in the Contract Documents. Engineer's review and approval of Shop Drawings and other submittals (except design calculations and design drawings) will be only for the purpose stated in Paragraph 6.17.D.1.

E. Contractor shall not be responsible for the adequacy of the performance or design criteria required by the Contract Documents.

Copyright © 2007 National Society of Professional Engineers for EJCDC. All rights reserved.

ARTICLE 7 – OTHER WORK AT THE SITE

7.01 *Related Work at Site*

A. Owner may perform other work related to the Project at the Site with Owner's employees, or through other direct contracts therefor, or have other work performed by utility owners. If such other work is not noted in the Contract Documents, then:

1. written notice thereof will be given to Contractor prior to starting any such other work; and

2. if Owner and Contractor are unable to agree on entitlement to or on the amount or extent, if any, of any adjustment in the Contract Price or Contract Times that should be allowed as a result of such other work, a Claim may be made therefor as provided in Paragraph 10.05.

B. Contractor shall afford each other contractor who is a party to such a direct contract, each utility owner, and Owner, if Owner is performing other work with Owner's employees, proper and safe access to the Site, provide a reasonable opportunity for the introduction and storage of materials and equipment and the execution of such other work, and properly coordinate the Work with theirs. Contractor shall do all cutting, fitting, and patching of the Work that may be required to properly connect or otherwise make its several parts come together and properly integrate with such other work. Contractor shall not endanger any work of others by cutting, excavating, or otherwise altering such work; provided, however, that Contractor may cut or alter others' work with the written consent of Engineer and the others whose work will be affected. The duties and responsibilities of Contractor under this Paragraph are for the benefit of such utility owners and other contractors to the extent that there are comparable provisions for the benefit of Contractor in said direct contracts between Owner and such utility owners and other contractors.

C. If the proper execution or results of any part of Contractor's Work depends upon work performed by others under this Article 7, Contractor shall inspect such other work and promptly report to Engineer in writing any delays, defects, or deficiencies in such other work that render it unavailable or unsuitable for the proper execution and results of Contractor's Work. Contractor's failure to so report will constitute an acceptance of such other work as fit and proper for integration with Contractor's Work except for latent defects and deficiencies in such other work.

7.02 *Coordination*

A. If Owner intends to contract with others for the performance of other work on the Project at the Site, the following will be set forth in Supplementary Conditions:

1. the individual or entity who will have authority and responsibility for coordination of the activities among the various contractors will be identified;

2. the specific matters to be covered by such authority and responsibility will be itemized; and

3. the extent of such authority and responsibilities will be provided.

B. Unless otherwise provided in the Supplementary Conditions, Owner shall have sole authority and responsibility for such coordination.

Copyright © 2007 National Society of Professional Engineers for EJCDC. All rights reserved.

7.03 *Legal Relationships*

A. Paragraphs 7.01.A and 7.02 are not applicable for utilities not under the control of Owner.

B. Each other direct contract of Owner under Paragraph 7.01.A shall provide that the other contractor is liable to Owner and Contractor for the reasonable direct delay and disruption costs incurred by Contractor as a result of the other contractor's wrongful actions or inactions.

C. Contractor shall be liable to Owner and any other contractor under direct contract to Owner for the reasonable direct delay and disruption costs incurred by such other contractor as a result of Contractor's wrongful action or inactions.

ARTICLE 8 – OWNER'S RESPONSIBILITIES

8.01 *Communications to Contractor*

A. Except as otherwise provided in these General Conditions, Owner shall issue all communications to Contractor through Engineer.

8.02 *Replacement of Engineer*

A. In case of termination of the employment of Engineer, Owner shall appoint an engineer to whom Contractor makes no reasonable objection, whose status under the Contract Documents shall be that of the former Engineer.

8.03 *Furnish Data*

A. Owner shall promptly furnish the data required of Owner under the Contract Documents.

8.04 *Pay When Due*

A. Owner shall make payments to Contractor when they are due as provided in Paragraphs 14.02.C and 14.07.C.

8.05 *Lands and Easements; Reports and Tests*

A. Owner's duties with respect to providing lands and easements and providing engineering surveys to establish reference points are set forth in Paragraphs 4.01 and 4.05. Paragraph 4.02 refers to Owner's identifying and making available to Contractor copies of reports of explorations and tests of subsurface conditions and drawings of physical conditions relating to existing surface or subsurface structures at the Site.

8.06 *Insurance*

A. Owner's responsibilities, if any, with respect to purchasing and maintaining liability and property insurance are set forth in Article 5.

8.07 *Change Orders*

A. Owner is obligated to execute Change Orders as indicated in Paragraph 10.03.

Copyright © 2007 National Society of Professional Engineers for EJCDC. All rights reserved.

8.08 *Inspections, Tests, and Approvals*

A. Owner's responsibility with respect to certain inspections, tests, and approvals is set forth in Paragraph 13.03.B.

8.09 *Limitations on Owner's Responsibilities*

A. The Owner shall not supervise, direct, or have control or authority over, nor be responsible for, Contractor's means, methods, techniques, sequences, or procedures of construction, or the safety precautions and programs incident thereto, or for any failure of Contractor to comply with Laws and Regulations applicable to the performance of the Work. Owner will not be responsible for Contractor's failure to perform the Work in accordance with the Contract Documents.

8.10 *Undisclosed Hazardous Environmental Condition*

A. Owner's responsibility in respect to an undisclosed Hazardous Environmental Condition is set forth in Paragraph 4.06.

8.11 *Evidence of Financial Arrangements*

A. Upon request of Contractor, Owner shall furnish Contractor reasonable evidence that financial arrangements have been made to satisfy Owner's obligations under the Contract Documents.

8.12 *Compliance with Safety Program*

A. While at the Site, Owner's employees and representatives shall comply with the specific applicable requirements of Contractor's safety programs of which Owner has been informed pursuant to Paragraph 6.13.D.

ARTICLE 9 – ENGINEER'S STATUS DURING CONSTRUCTION

9.01 *Owner's Representative*

A. Engineer will be Owner's representative during the construction period. The duties and responsibilities and the limitations of authority of Engineer as Owner's representative during construction are set forth in the Contract Documents.

9.02 *Visits to Site*

A. Engineer will make visits to the Site at intervals appropriate to the various stages of construction as Engineer deems necessary in order to observe as an experienced and qualified design professional the progress that has been made and the quality of the various aspects of Contractor's executed Work. Based on information obtained during such visits and observations, Engineer, for the benefit of Owner, will determine, in general, if the Work is proceeding in accordance with the Contract Documents. Engineer will not be required to make exhaustive or continuous inspections on the Site to check the quality or quantity of the Work. Engineer's efforts will be directed toward providing for Owner a greater degree of confidence that the completed Work will conform generally to the Contract Documents. On the basis of such visits

Copyright © 2007 National Society of Professional Engineers for EJCDC. All rights reserved.

and observations, Engineer will keep Owner informed of the progress of the Work and will endeavor to guard Owner against defective Work.

B. Engineer's visits and observations are subject to all the limitations on Engineer's authority and responsibility set forth in Paragraph 9.09. Particularly, but without limitation, during or as a result of Engineer's visits or observations of Contractor's Work, Engineer will not supervise, direct, control, or have authority over or be responsible for Contractor's means, methods, techniques, sequences, or procedures of construction, or the safety precautions and programs incident thereto, or for any failure of Contractor to comply with Laws and Regulations applicable to the performance of the Work.

9.03 *Project Representative*

A. If Owner and Engineer agree, Engineer will furnish a Resident Project Representative to assist Engineer in providing more extensive observation of the Work. The authority and responsibilities of any such Resident Project Representative and assistants will be as provided in the Supplementary Conditions, and limitations on the responsibilities thereof will be as provided in Paragraph 9.09. If Owner designates another representative or agent to represent Owner at the Site who is not Engineer's consultant, agent or employee, the responsibilities and authority and limitations thereon of such other individual or entity will be as provided in the Supplementary Conditions.

9.04 *Authorized Variations in Work*

A. Engineer may authorize minor variations in the Work from the requirements of the Contract Documents which do not involve an adjustment in the Contract Price or the Contract Times and are compatible with the design concept of the completed Project as a functioning whole as indicated by the Contract Documents. These may be accomplished by a Field Order and will be binding on Owner and also on Contractor, who shall perform the Work involved promptly. If Owner or Contractor believes that a Field Order justifies an adjustment in the Contract Price or Contract Times, or both, and the parties are unable to agree on entitlement to or on the amount or extent, if any, of any such adjustment, a Claim may be made therefor as provided in Paragraph 10.05.

9.05 *Rejecting Defective Work*

A. Engineer will have authority to reject Work which Engineer believes to be defective, or that Engineer believes will not produce a completed Project that conforms to the Contract Documents or that will prejudice the integrity of the design concept of the completed Project as a functioning whole as indicated by the Contract Documents. Engineer will also have authority to require special inspection or testing of the Work as provided in Paragraph 13.04, whether or not the Work is fabricated, installed, or completed.

9.06 *Shop Drawings, Change Orders and Payments*

A. In connection with Engineer's authority, and limitations thereof, as to Shop Drawings and Samples, see Paragraph 6.17.

Copyright © 2007 National Society of Professional Engineers for EJCDC. All rights reserved.

B. In connection with Engineer's authority, and limitations thereof, as to design calculations and design drawings submitted in response to a delegation of professional design services, if any, see Paragraph 6.21.

C. In connection with Engineer's authority as to Change Orders, see Articles 10, 11, and 12.

D. In connection with Engineer's authority as to Applications for Payment, see Article 14.

9.07 *Determinations for Unit Price Work*

A. Engineer will determine the actual quantities and classifications of Unit Price Work performed by Contractor. Engineer will review with Contractor the Engineer's preliminary determinations on such matters before rendering a written decision thereon (by recommendation of an Application for Payment or otherwise). Engineer's written decision thereon will be final and binding (except as modified by Engineer to reflect changed factual conditions or more accurate data) upon Owner and Contractor, subject to the provisions of Paragraph 10.05.

9.08 *Decisions on Requirements of Contract Documents and Acceptability of Work*

A. Engineer will be the initial interpreter of the requirements of the Contract Documents and judge of the acceptability of the Work thereunder. All matters in question and other matters between Owner and Contractor arising prior to the date final payment is due relating to the acceptability of the Work, and the interpretation of the requirements of the Contract Documents pertaining to the performance of the Work, will be referred initially to Engineer in writing within 30 days of the event giving rise to the question.

B. Engineer will, with reasonable promptness, render a written decision on the issue referred. If Owner or Contractor believes that any such decision entitles them to an adjustment in the Contract Price or Contract Times or both, a Claim may be made under Paragraph 10.05. The date of Engineer's decision shall be the date of the event giving rise to the issues referenced for the purposes of Paragraph 10.05.B.

C. Engineer's written decision on the issue referred will be final and binding on Owner and Contractor, subject to the provisions of Paragraph 10.05.

D. When functioning as interpreter and judge under this Paragraph 9.08, Engineer will not show partiality to Owner or Contractor and will not be liable in connection with any interpretation or decision rendered in good faith in such capacity.

9.09 *Limitations on Engineer's Authority and Responsibilities*

A. Neither Engineer's authority or responsibility under this Article 9 or under any other provision of the Contract Documents nor any decision made by Engineer in good faith either to exercise or not exercise such authority or responsibility or the undertaking, exercise, or performance of any authority or responsibility by Engineer shall create, impose, or give rise to any duty in contract, tort, or otherwise owed by Engineer to Contractor, any Subcontractor, any Supplier, any other individual or entity, or to any surety for or employee or agent of any of them.

Copyright © 2007 National Society of Professional Engineers for EJCDC. All rights reserved.

B. Engineer will not supervise, direct, control, or have authority over or be responsible for Contractor's means, methods, techniques, sequences, or procedures of construction, or the safety precautions and programs incident thereto, or for any failure of Contractor to comply with Laws and Regulations applicable to the performance of the Work. Engineer will not be responsible for Contractor's failure to perform the Work in accordance with the Contract Documents.

C. Engineer will not be responsible for the acts or omissions of Contractor or of any Subcontractor, any Supplier, or of any other individual or entity performing any of the Work.

D. Engineer's review of the final Application for Payment and accompanying documentation and all maintenance and operating instructions, schedules, guarantees, bonds, certificates of inspection, tests and approvals, and other documentation required to be delivered by Paragraph 14.07.A will only be to determine generally that their content complies with the requirements of, and in the case of certificates of inspections, tests, and approvals that the results certified indicate compliance with, the Contract Documents.

E. The limitations upon authority and responsibility set forth in this Paragraph 9.09 shall also apply to the Resident Project Representative, if any, and assistants, if any.

9.10 *Compliance with Safety Program*

A. While at the Site, Engineer's employees and representatives shall comply with the specific applicable requirements of Contractor's safety programs of which Engineer has been informed pursuant to Paragraph 6.13.D.

ARTICLE 10 – CHANGES IN THE WORK; CLAIMS

10.01 *Authorized Changes in the Work*

A. Without invalidating the Contract and without notice to any surety, Owner may, at any time or from time to time, order additions, deletions, or revisions in the Work by a Change Order, or a Work Change Directive. Upon receipt of any such document, Contractor shall promptly proceed with the Work involved which will be performed under the applicable conditions of the Contract Documents (except as otherwise specifically provided).

B. If Owner and Contractor are unable to agree on entitlement to, or on the amount or extent, if any, of an adjustment in the Contract Price or Contract Times, or both, that should be allowed as a result of a Work Change Directive, a Claim may be made therefor as provided in Paragraph 10.05.

10.02 *Unauthorized Changes in the Work*

A. Contractor shall not be entitled to an increase in the Contract Price or an extension of the Contract Times with respect to any work performed that is not required by the Contract Documents as amended, modified, or supplemented as provided in Paragraph 3.04, except in the case of an emergency as provided in Paragraph 6.16 or in the case of uncovering Work as provided in Paragraph 13.04.D.

Copyright © 2007 National Society of Professional Engineers for EJCDC. All rights reserved.

10.03 *Execution of Change Orders*

A. Owner and Contractor shall execute appropriate Change Orders recommended by Engineer covering:

1. changes in the Work which are: (i) ordered by Owner pursuant to Paragraph 10.01.A, (ii) required because of acceptance of defective Work under Paragraph 13.08.A or Owner's correction of defective Work under Paragraph 13.09, or (iii) agreed to by the parties;

2. changes in the Contract Price or Contract Times which are agreed to by the parties, including any undisputed sum or amount of time for Work actually performed in accordance with a Work Change Directive; and

3. changes in the Contract Price or Contract Times which embody the substance of any written decision rendered by Engineer pursuant to Paragraph 10.05; provided that, in lieu of executing any such Change Order, an appeal may be taken from any such decision in accordance with the provisions of the Contract Documents and applicable Laws and Regulations, but during any such appeal, Contractor shall carry on the Work and adhere to the Progress Schedule as provided in Paragraph 6.18.A.

10.04 *Notification to Surety*

A. If the provisions of any bond require notice to be given to a surety of any change affecting the general scope of the Work or the provisions of the Contract Documents (including, but not limited to, Contract Price or Contract Times), the giving of any such notice will be Contractor's responsibility. The amount of each applicable bond will be adjusted to reflect the effect of any such change.

10.05 *Claims*

A. *Engineer's Decision Required*: All Claims, except those waived pursuant to Paragraph 14.09, shall be referred to the Engineer for decision. A decision by Engineer shall be required as a condition precedent to any exercise by Owner or Contractor of any rights or remedies either may otherwise have under the Contract Documents or by Laws and Regulations in respect of such Claims.

B. *Notice:* Written notice stating the general nature of each Claim shall be delivered by the claimant to Engineer and the other party to the Contract promptly (but in no event later than 30 days) after the start of the event giving rise thereto. The responsibility to substantiate a Claim shall rest with the party making the Claim. Notice of the amount or extent of the Claim, with supporting data shall be delivered to the Engineer and the other party to the Contract within 60 days after the start of such event (unless Engineer allows additional time for claimant to submit additional or more accurate data in support of such Claim). A Claim for an adjustment in Contract Price shall be prepared in accordance with the provisions of Paragraph 12.01.B. A Claim for an adjustment in Contract Times shall be prepared in accordance with the provisions of Paragraph 12.02.B. Each Claim shall be accompanied by claimant's written statement that the adjustment claimed is the entire adjustment to which the claimant believes it is entitled as a result of said event. The

Copyright © 2007 National Society of Professional Engineers for EJCDC. All rights reserved.

opposing party shall submit any response to Engineer and the claimant within 30 days after receipt of the claimant's last submittal (unless Engineer allows additional time).

C. *Engineer's Action*: Engineer will review each Claim and, within 30 days after receipt of the last submittal of the claimant or the last submittal of the opposing party, if any, take one of the following actions in writing:

1. deny the Claim in whole or in part;

2. approve the Claim; or

3. notify the parties that the Engineer is unable to resolve the Claim if, in the Engineer's sole discretion, it would be inappropriate for the Engineer to do so. For purposes of further resolution of the Claim, such notice shall be deemed a denial.

D. In the event that Engineer does not take action on a Claim within said 30 days, the Claim shall be deemed denied.

E. Engineer's written action under Paragraph 10.05.C or denial pursuant to Paragraphs 10.05.C.3 or 10.05.D will be final and binding upon Owner and Contractor, unless Owner or Contractor invoke the dispute resolution procedure set forth in Article 16 within 30 days of such action or denial.

F. No Claim for an adjustment in Contract Price or Contract Times will be valid if not submitted in accordance with this Paragraph 10.05.

ARTICLE 11 – COST OF THE WORK; ALLOWANCES; UNIT PRICE WORK

11.01 *Cost of the Work*

A. *Costs Included:* The term Cost of the Work means the sum of all costs, except those excluded in Paragraph 11.01.B, necessarily incurred and paid by Contractor in the proper performance of the Work. When the value of any Work covered by a Change Order or when a Claim for an adjustment in Contract Price is determined on the basis of Cost of the Work, the costs to be reimbursed to Contractor will be only those additional or incremental costs required because of the change in the Work or because of the event giving rise to the Claim. Except as otherwise may be agreed to in writing by Owner, such costs shall be in amounts no higher than those prevailing in the locality of the Project, shall not include any of the costs itemized in Paragraph 11.01.B, and shall include only the following items:

1. Payroll costs for employees in the direct employ of Contractor in the performance of the Work under schedules of job classifications agreed upon by Owner and Contractor. Such employees shall include, without limitation, superintendents, foremen, and other personnel employed full time on the Work. Payroll costs for employees not employed full time on the Work shall be apportioned on the basis of their time spent on the Work. Payroll costs shall include, but not be limited to, salaries and wages plus the cost of fringe benefits, which shall include social security contributions, unemployment, excise, and payroll taxes, workers' compensation, health and retirement benefits, bonuses, sick leave, vacation and holiday pay applicable thereto. The expenses of performing Work outside of regular working hours, on

Copyright © 2007 National Society of Professional Engineers for EJCDC. All rights reserved.

Saturday, Sunday, or legal holidays, shall be included in the above to the extent authorized by Owner.

2. Cost of all materials and equipment furnished and incorporated in the Work, including costs of transportation and storage thereof, and Suppliers' field services required in connection therewith. All cash discounts shall accrue to Contractor unless Owner deposits funds with Contractor with which to make payments, in which case the cash discounts shall accrue to Owner. All trade discounts, rebates and refunds and returns from sale of surplus materials and equipment shall accrue to Owner, and Contractor shall make provisions so that they may be obtained.

3. Payments made by Contractor to Subcontractors for Work performed by Subcontractors. If required by Owner, Contractor shall obtain competitive bids from subcontractors acceptable to Owner and Contractor and shall deliver such bids to Owner, who will then determine, with the advice of Engineer, which bids, if any, will be acceptable. If any subcontract provides that the Subcontractor is to be paid on the basis of Cost of the Work plus a fee, the Subcontractor's Cost of the Work and fee shall be determined in the same manner as Contractor's Cost of the Work and fee as provided in this Paragraph 11.01.

4. Costs of special consultants (including but not limited to engineers, architects, testing laboratories, surveyors, attorneys, and accountants) employed for services specifically related to the Work.

5. Supplemental costs including the following:

   a. The proportion of necessary transportation, travel, and subsistence expenses of Contractor's employees incurred in discharge of duties connected with the Work.

   b. Cost, including transportation and maintenance, of all materials, supplies, equipment, machinery, appliances, office, and temporary facilities at the Site, and hand tools not owned by the workers, which are consumed in the performance of the Work, and cost, less market value, of such items used but not consumed which remain the property of Contractor.

   c. Rentals of all construction equipment and machinery, and the parts thereof whether rented from Contractor or others in accordance with rental agreements approved by Owner with the advice of Engineer, and the costs of transportation, loading, unloading, assembly, dismantling, and removal thereof. All such costs shall be in accordance with the terms of said rental agreements. The rental of any such equipment, machinery, or parts shall cease when the use thereof is no longer necessary for the Work.

   d. Sales, consumer, use, and other similar taxes related to the Work, and for which Contractor is liable, as imposed by Laws and Regulations.

   e. Deposits lost for causes other than negligence of Contractor, any Subcontractor, or anyone directly or indirectly employed by any of them or for whose acts any of them may be liable, and royalty payments and fees for permits and licenses.

Copyright © 2007 National Society of Professional Engineers for EJCDC. All rights reserved.

f. Losses and damages (and related expenses) caused by damage to the Work, not compensated by insurance or otherwise, sustained by Contractor in connection with the performance of the Work (except losses and damages within the deductible amounts of property insurance established in accordance with Paragraph 5.06.D), provided such losses and damages have resulted from causes other than the negligence of Contractor, any Subcontractor, or anyone directly or indirectly employed by any of them or for whose acts any of them may be liable. Such losses shall include settlements made with the written consent and approval of Owner. No such losses, damages, and expenses shall be included in the Cost of the Work for the purpose of determining Contractor's fee.

g. The cost of utilities, fuel, and sanitary facilities at the Site.

h. Minor expenses such as telegrams, long distance telephone calls, telephone service at the Site, express and courier services, and similar petty cash items in connection with the Work.

i. The costs of premiums for all bonds and insurance Contractor is required by the Contract Documents to purchase and maintain.

B. *Costs Excluded:* The term Cost of the Work shall not include any of the following items:

1. Payroll costs and other compensation of Contractor's officers, executives, principals (of partnerships and sole proprietorships), general managers, safety managers, engineers, architects, estimators, attorneys, auditors, accountants, purchasing and contracting agents, expediters, timekeepers, clerks, and other personnel employed by Contractor, whether at the Site or in Contractor's principal or branch office for general administration of the Work and not specifically included in the agreed upon schedule of job classifications referred to in Paragraph 11.01.A.1 or specifically covered by Paragraph 11.01.A.4, all of which are to be considered administrative costs covered by the Contractor's fee.

2. Expenses of Contractor's principal and branch offices other than Contractor's office at the Site.

3. Any part of Contractor's capital expenses, including interest on Contractor's capital employed for the Work and charges against Contractor for delinquent payments.

4. Costs due to the negligence of Contractor, any Subcontractor, or anyone directly or indirectly employed by any of them or for whose acts any of them may be liable, including but not limited to, the correction of defective Work, disposal of materials or equipment wrongly supplied, and making good any damage to property.

5. Other overhead or general expense costs of any kind and the costs of any item not specifically and expressly included in Paragraphs 11.01.A.

C. *Contractor's Fee:* When all the Work is performed on the basis of cost-plus, Contractor's fee shall be determined as set forth in the Agreement. When the value of any Work covered by a Change Order or when a Claim for an adjustment in Contract Price is determined on the basis of Cost of the Work, Contractor's fee shall be determined as set forth in Paragraph 12.01.C.

Copyright © 2007 National Society of Professional Engineers for EJCDC. All rights reserved.

D. *Documentation:* Whenever the Cost of the Work for any purpose is to be determined pursuant to Paragraphs 11.01.A and 11.01.B, Contractor will establish and maintain records thereof in accordance with generally accepted accounting practices and submit in a form acceptable to Engineer an itemized cost breakdown together with supporting data.

11.02 *Allowances*

A. It is understood that Contractor has included in the Contract Price all allowances so named in the Contract Documents and shall cause the Work so covered to be performed for such sums and by such persons or entities as may be acceptable to Owner and Engineer.

B. *Cash Allowances:*

1. Contractor agrees that:

a. the cash allowances include the cost to Contractor (less any applicable trade discounts) of materials and equipment required by the allowances to be delivered at the Site, and all applicable taxes; and

b. Contractor's costs for unloading and handling on the Site, labor, installation, overhead, profit, and other expenses contemplated for the cash allowances have been included in the Contract Price and not in the allowances, and no demand for additional payment on account of any of the foregoing will be valid.

C. *Contingency Allowance:*

1. Contractor agrees that a contingency allowance, if any, is for the sole use of Owner to cover unanticipated costs.

D. Prior to final payment, an appropriate Change Order will be issued as recommended by Engineer to reflect actual amounts due Contractor on account of Work covered by allowances, and the Contract Price shall be correspondingly adjusted.

11.03 *Unit Price Work*

A. Where the Contract Documents provide that all or part of the Work is to be Unit Price Work, initially the Contract Price will be deemed to include for all Unit Price Work an amount equal to the sum of the unit price for each separately identified item of Unit Price Work times the estimated quantity of each item as indicated in the Agreement.

B. The estimated quantities of items of Unit Price Work are not guaranteed and are solely for the purpose of comparison of Bids and determining an initial Contract Price. Determinations of the actual quantities and classifications of Unit Price Work performed by Contractor will be made by Engineer subject to the provisions of Paragraph 9.07.

C. Each unit price will be deemed to include an amount considered by Contractor to be adequate to cover Contractor's overhead and profit for each separately identified item.

Copyright © 2007 National Society of Professional Engineers for EJCDC. All rights reserved.

D. Owner or Contractor may make a Claim for an adjustment in the Contract Price in accordance with Paragraph 10.05 if:

1. the quantity of any item of Unit Price Work performed by Contractor differs materially and significantly from the estimated quantity of such item indicated in the Agreement; and

2. there is no corresponding adjustment with respect to any other item of Work; and

3. Contractor believes that Contractor is entitled to an increase in Contract Price as a result of having incurred additional expense or Owner believes that Owner is entitled to a decrease in Contract Price and the parties are unable to agree as to the amount of any such increase or decrease.

ARTICLE 12 – CHANGE OF CONTRACT PRICE; CHANGE OF CONTRACT TIMES

12.01 *Change of Contract Price*

A. The Contract Price may only be changed by a Change Order. Any Claim for an adjustment in the Contract Price shall be based on written notice submitted by the party making the Claim to the Engineer and the other party to the Contract in accordance with the provisions of Paragraph 10.05.

B. The value of any Work covered by a Change Order or of any Claim for an adjustment in the Contract Price will be determined as follows:

1. where the Work involved is covered by unit prices contained in the Contract Documents, by application of such unit prices to the quantities of the items involved (subject to the provisions of Paragraph 11.03); or

2. where the Work involved is not covered by unit prices contained in the Contract Documents, by a mutually agreed lump sum (which may include an allowance for overhead and profit not necessarily in accordance with Paragraph 12.01.C.2); or

3. where the Work involved is not covered by unit prices contained in the Contract Documents and agreement to a lump sum is not reached under Paragraph 12.01.B.2, on the basis of the Cost of the Work (determined as provided in Paragraph 11.01) plus a Contractor's fee for overhead and profit (determined as provided in Paragraph 12.01.C).

C. *Contractor's Fee:* The Contractor's fee for overhead and profit shall be determined as follows:

1. a mutually acceptable fixed fee; or

2. if a fixed fee is not agreed upon, then a fee based on the following percentages of the various portions of the Cost of the Work:

a. for costs incurred under Paragraphs 11.01.A.1 and 11.01.A.2, the Contractor's fee shall be 15 percent;

b. for costs incurred under Paragraph 11.01.A.3, the Contractor's fee shall be five percent;

Copyright © 2007 National Society of Professional Engineers for EJCDC. All rights reserved.

c. where one or more tiers of subcontracts are on the basis of Cost of the Work plus a fee and no fixed fee is agreed upon, the intent of Paragraphs 12.01.C.2.a and 12.01.C.2.b is that the Subcontractor who actually performs the Work, at whatever tier, will be paid a fee of 15 percent of the costs incurred by such Subcontractor under Paragraphs 11.01.A.1 and 11.01.A.2 and that any higher tier Subcontractor and Contractor will each be paid a fee of five percent of the amount paid to the next lower tier Subcontractor;

d. no fee shall be payable on the basis of costs itemized under Paragraphs 11.01.A.4, 11.01.A.5, and 11.01.B;

e. the amount of credit to be allowed by Contractor to Owner for any change which results in a net decrease in cost will be the amount of the actual net decrease in cost plus a deduction in Contractor's fee by an amount equal to five percent of such net decrease; and

f. when both additions and credits are involved in any one change, the adjustment in Contractor's fee shall be computed on the basis of the net change in accordance with Paragraphs 12.01.C.2.a through 12.01.C.2.e, inclusive.

12.02 *Change of Contract Times*

A. The Contract Times may only be changed by a Change Order. Any Claim for an adjustment in the Contract Times shall be based on written notice submitted by the party making the Claim to the Engineer and the other party to the Contract in accordance with the provisions of Paragraph 10.05.

B. Any adjustment of the Contract Times covered by a Change Order or any Claim for an adjustment in the Contract Times will be determined in accordance with the provisions of this Article 12.

12.03 *Delays*

A. Where Contractor is prevented from completing any part of the Work within the Contract Times due to delay beyond the control of Contractor, the Contract Times will be extended in an amount equal to the time lost due to such delay if a Claim is made therefor as provided in Paragraph 12.02.A. Delays beyond the control of Contractor shall include, but not be limited to, acts or neglect by Owner, acts or neglect of utility owners or other contractors performing other work as contemplated by Article 7, fires, floods, epidemics, abnormal weather conditions, or acts of God.

B. If Owner, Engineer, or other contractors or utility owners performing other work for Owner as contemplated by Article 7, or anyone for whom Owner is responsible, delays, disrupts, or interferes with the performance or progress of the Work, then Contractor shall be entitled to an equitable adjustment in the Contract Price or the Contract Times, or both. Contractor's entitlement to an adjustment of the Contract Times is conditioned on such adjustment being essential to Contractor's ability to complete the Work within the Contract Times.

C. If Contractor is delayed in the performance or progress of the Work by fire, flood, epidemic, abnormal weather conditions, acts of God, acts or failures to act of utility owners not under the

Copyright © 2007 National Society of Professional Engineers for EJCDC. All rights reserved.

control of Owner, or other causes not the fault of and beyond control of Owner and Contractor, then Contractor shall be entitled to an equitable adjustment in Contract Times, if such adjustment is essential to Contractor's ability to complete the Work within the Contract Times. Such an adjustment shall be Contractor's sole and exclusive remedy for the delays described in this Paragraph 12.03.C.

D. Owner, Engineer, and their officers, directors, members, partners, employees, agents, consultants, or subcontractors shall not be liable to Contractor for any claims, costs, losses, or damages (including but not limited to all fees and charges of engineers, architects, attorneys, and other professionals and all court or arbitration or other dispute resolution costs) sustained by Contractor on or in connection with any other project or anticipated project.

E. Contractor shall not be entitled to an adjustment in Contract Price or Contract Times for delays within the control of Contractor. Delays attributable to and within the control of a Subcontractor or Supplier shall be deemed to be delays within the control of Contractor.

ARTICLE 13 – TESTS AND INSPECTIONS; CORRECTION, REMOVAL OR ACCEPTANCE OF DEFECTIVE WORK

13.01 *Notice of Defects*

A. Prompt notice of all defective Work of which Owner or Engineer has actual knowledge will be given to Contractor. Defective Work may be rejected, corrected, or accepted as provided in this Article 13.

13.02 *Access to Work*

A. Owner, Engineer, their consultants and other representatives and personnel of Owner, independent testing laboratories, and governmental agencies with jurisdictional interests will have access to the Site and the Work at reasonable times for their observation, inspection, and testing. Contractor shall provide them proper and safe conditions for such access and advise them of Contractor's safety procedures and programs so that they may comply therewith as applicable.

13.03 *Tests and Inspections*

A. Contractor shall give Engineer timely notice of readiness of the Work for all required inspections, tests, or approvals and shall cooperate with inspection and testing personnel to facilitate required inspections or tests.

B. Owner shall employ and pay for the services of an independent testing laboratory to perform all inspections, tests, or approvals required by the Contract Documents except:

1. for inspections, tests, or approvals covered by Paragraphs 13.03.C and 13.03.D below;

2. that costs incurred in connection with tests or inspections conducted pursuant to Paragraph 13.04.B shall be paid as provided in Paragraph 13.04.C; and

3. as otherwise specifically provided in the Contract Documents.

Copyright © 2007 National Society of Professional Engineers for EJCDC. All rights reserved.

C. If Laws or Regulations of any public body having jurisdiction require any Work (or part thereof) specifically to be inspected, tested, or approved by an employee or other representative of such public body, Contractor shall assume full responsibility for arranging and obtaining such inspections, tests, or approvals, pay all costs in connection therewith, and furnish Engineer the required certificates of inspection or approval.

D. Contractor shall be responsible for arranging and obtaining and shall pay all costs in connection with any inspections, tests, or approvals required for Owner's and Engineer's acceptance of materials or equipment to be incorporated in the Work; or acceptance of materials, mix designs, or equipment submitted for approval prior to Contractor's purchase thereof for incorporation in the Work. Such inspections, tests, or approvals shall be performed by organizations acceptable to Owner and Engineer.

E. If any Work (or the work of others) that is to be inspected, tested, or approved is covered by Contractor without written concurrence of Engineer, Contractor shall, if requested by Engineer, uncover such Work for observation.

F. Uncovering Work as provided in Paragraph 13.03.E shall be at Contractor's expense unless Contractor has given Engineer timely notice of Contractor's intention to cover the same and Engineer has not acted with reasonable promptness in response to such notice.

13.04 *Uncovering Work*

A. If any Work is covered contrary to the written request of Engineer, it must, if requested by Engineer, be uncovered for Engineer's observation and replaced at Contractor's expense.

B. If Engineer considers it necessary or advisable that covered Work be observed by Engineer or inspected or tested by others, Contractor, at Engineer's request, shall uncover, expose, or otherwise make available for observation, inspection, or testing as Engineer may require, that portion of the Work in question, furnishing all necessary labor, material, and equipment.

C. If it is found that the uncovered Work is defective, Contractor shall pay all claims, costs, losses, and damages (including but not limited to all fees and charges of engineers, architects, attorneys, and other professionals and all court or arbitration or other dispute resolution costs) arising out of or relating to such uncovering, exposure, observation, inspection, and testing, and of satisfactory replacement or reconstruction (including but not limited to all costs of repair or replacement of work of others); and Owner shall be entitled to an appropriate decrease in the Contract Price. If the parties are unable to agree as to the amount thereof, Owner may make a Claim therefor as provided in Paragraph 10.05.

D. If the uncovered Work is not found to be defective, Contractor shall be allowed an increase in the Contract Price or an extension of the Contract Times, or both, directly attributable to such uncovering, exposure, observation, inspection, testing, replacement, and reconstruction. If the parties are unable to agree as to the amount or extent thereof, Contractor may make a Claim therefor as provided in Paragraph 10.05.

Copyright © 2007 National Society of Professional Engineers for EJCDC. All rights reserved.

13.05 *Owner May Stop the Work*

A. If the Work is defective, or Contractor fails to supply sufficient skilled workers or suitable materials or equipment, or fails to perform the Work in such a way that the completed Work will conform to the Contract Documents, Owner may order Contractor to stop the Work, or any portion thereof, until the cause for such order has been eliminated; however, this right of Owner to stop the Work shall not give rise to any duty on the part of Owner to exercise this right for the benefit of Contractor, any Subcontractor, any Supplier, any other individual or entity, or any surety for, or employee or agent of any of them.

13.06 *Correction or Removal of Defective Work*

A. Promptly after receipt of written notice, Contractor shall correct all defective Work, whether or not fabricated, installed, or completed, or, if the Work has been rejected by Engineer, remove it from the Project and replace it with Work that is not defective. Contractor shall pay all claims, costs, losses, and damages (including but not limited to all fees and charges of engineers, architects, attorneys, and other professionals and all court or arbitration or other dispute resolution costs) arising out of or relating to such correction or removal (including but not limited to all costs of repair or replacement of work of others).

B. When correcting defective Work under the terms of this Paragraph 13.06 or Paragraph 13.07, Contractor shall take no action that would void or otherwise impair Owner's special warranty and guarantee, if any, on said Work.

13.07 *Correction Period*

A. If within one year after the date of Substantial Completion (or such longer period of time as may be prescribed by the terms of any applicable special guarantee required by the Contract Documents) or by any specific provision of the Contract Documents, any Work is found to be defective, or if the repair of any damages to the land or areas made available for Contractor's use by Owner or permitted by Laws and Regulations as contemplated in Paragraph 6.11.A is found to be defective, Contractor shall promptly, without cost to Owner and in accordance with Owner's written instructions:

1. repair such defective land or areas; or

2. correct such defective Work; or

3. if the defective Work has been rejected by Owner, remove it from the Project and replace it with Work that is not defective, and

4. satisfactorily correct or repair or remove and replace any damage to other Work, to the work of others or other land or areas resulting therefrom.

B. If Contractor does not promptly comply with the terms of Owner's written instructions, or in an emergency where delay would cause serious risk of loss or damage, Owner may have the defective Work corrected or repaired or may have the rejected Work removed and replaced. All claims, costs, losses, and damages (including but not limited to all fees and charges of engineers, architects, attorneys, and other professionals and all court or arbitration or other dispute

Copyright © 2007 National Society of Professional Engineers for EJCDC. All rights reserved.

resolution costs) arising out of or relating to such correction or repair or such removal and replacement (including but not limited to all costs of repair or replacement of work of others) will be paid by Contractor.

C. In special circumstances where a particular item of equipment is placed in continuous service before Substantial Completion of all the Work, the correction period for that item may start to run from an earlier date if so provided in the Specifications.

D. Where defective Work (and damage to other Work resulting therefrom) has been corrected or removed and replaced under this Paragraph 13.07, the correction period hereunder with respect to such Work will be extended for an additional period of one year after such correction or removal and replacement has been satisfactorily completed.

E. Contractor's obligations under this Paragraph 13.07 are in addition to any other obligation or warranty. The provisions of this Paragraph 13.07 shall not be construed as a substitute for, or a waiver of, the provisions of any applicable statute of limitation or repose.

13.08 *Acceptance of Defective Work*

A. If, instead of requiring correction or removal and replacement of defective Work, Owner (and, prior to Engineer's recommendation of final payment, Engineer) prefers to accept it, Owner may do so. Contractor shall pay all claims, costs, losses, and damages (including but not limited to all fees and charges of engineers, architects, attorneys, and other professionals and all court or arbitration or other dispute resolution costs) attributable to Owner's evaluation of and determination to accept such defective Work (such costs to be approved by Engineer as to reasonableness) and for the diminished value of the Work to the extent not otherwise paid by Contractor pursuant to this sentence. If any such acceptance occurs prior to Engineer's recommendation of final payment, a Change Order will be issued incorporating the necessary revisions in the Contract Documents with respect to the Work, and Owner shall be entitled to an appropriate decrease in the Contract Price, reflecting the diminished value of Work so accepted. If the parties are unable to agree as to the amount thereof, Owner may make a Claim therefor as provided in Paragraph 10.05. If the acceptance occurs after such recommendation, an appropriate amount will be paid by Contractor to Owner.

13.09 *Owner May Correct Defective Work*

A. If Contractor fails within a reasonable time after written notice from Engineer to correct defective Work, or to remove and replace rejected Work as required by Engineer in accordance with Paragraph 13.06.A, or if Contractor fails to perform the Work in accordance with the Contract Documents, or if Contractor fails to comply with any other provision of the Contract Documents, Owner may, after seven days written notice to Contractor, correct, or remedy any such deficiency.

B. In exercising the rights and remedies under this Paragraph 13.09, Owner shall proceed expeditiously. In connection with such corrective or remedial action, Owner may exclude Contractor from all or part of the Site, take possession of all or part of the Work and suspend Contractor's services related thereto, take possession of Contractor's tools, appliances, construction equipment and machinery at the Site, and incorporate in the Work all materials and

Copyright © 2007 National Society of Professional Engineers for EJCDC. All rights reserved.

equipment stored at the Site or for which Owner has paid Contractor but which are stored elsewhere. Contractor shall allow Owner, Owner's representatives, agents and employees, Owner's other contractors, and Engineer and Engineer's consultants access to the Site to enable Owner to exercise the rights and remedies under this Paragraph.

C. All claims, costs, losses, and damages (including but not limited to all fees and charges of engineers, architects, attorneys, and other professionals and all court or arbitration or other dispute resolution costs) incurred or sustained by Owner in exercising the rights and remedies under this Paragraph 13.09 will be charged against Contractor, and a Change Order will be issued incorporating the necessary revisions in the Contract Documents with respect to the Work; and Owner shall be entitled to an appropriate decrease in the Contract Price. If the parties are unable to agree as to the amount of the adjustment, Owner may make a Claim therefor as provided in Paragraph 10.05. Such claims, costs, losses and damages will include but not be limited to all costs of repair, or replacement of work of others destroyed or damaged by correction, removal, or replacement of Contractor's defective Work.

D. Contractor shall not be allowed an extension of the Contract Times because of any delay in the performance of the Work attributable to the exercise by Owner of Owner's rights and remedies under this Paragraph 13.09.

ARTICLE 14 – PAYMENTS TO CONTRACTOR AND COMPLETION

14.01 *Schedule of Values*

A. The Schedule of Values established as provided in Paragraph 2.07.A will serve as the basis for progress payments and will be incorporated into a form of Application for Payment acceptable to Engineer. Progress payments on account of Unit Price Work will be based on the number of units completed.

14.02 *Progress Payments*

A. *Applications for Payments:*

1. At least 20 days before the date established in the Agreement for each progress payment (but not more often than once a month), Contractor shall submit to Engineer for review an Application for Payment filled out and signed by Contractor covering the Work completed as of the date of the Application and accompanied by such supporting documentation as is required by the Contract Documents. If payment is requested on the basis of materials and equipment not incorporated in the Work but delivered and suitably stored at the Site or at another location agreed to in writing, the Application for Payment shall also be accompanied by a bill of sale, invoice, or other documentation warranting that Owner has received the materials and equipment free and clear of all Liens and evidence that the materials and equipment are covered by appropriate property insurance or other arrangements to protect Owner's interest therein, all of which must be satisfactory to Owner.

2. Beginning with the second Application for Payment, each Application shall include an affidavit of Contractor stating that all previous progress payments received on account of the

Copyright © 2007 National Society of Professional Engineers for EJCDC. All rights reserved.

Work have been applied on account to discharge Contractor's legitimate obligations associated with prior Applications for Payment.

3. The amount of retainage with respect to progress payments will be as stipulated in the Agreement.

B. *Review of Applications:*

1. Engineer will, within 10 days after receipt of each Application for Payment, either indicate in writing a recommendation of payment and present the Application to Owner or return the Application to Contractor indicating in writing Engineer's reasons for refusing to recommend payment. In the latter case, Contractor may make the necessary corrections and resubmit the Application.

2. Engineer's recommendation of any payment requested in an Application for Payment will constitute a representation by Engineer to Owner, based on Engineer's observations of the executed Work as an experienced and qualified design professional, and on Engineer's review of the Application for Payment and the accompanying data and schedules, that to the best of Engineer's knowledge, information and belief:

   a. the Work has progressed to the point indicated;

   b. the quality of the Work is generally in accordance with the Contract Documents (subject to an evaluation of the Work as a functioning whole prior to or upon Substantial Completion, the results of any subsequent tests called for in the Contract Documents, a final determination of quantities and classifications for Unit Price Work under Paragraph 9.07, and any other qualifications stated in the recommendation); and

   c. the conditions precedent to Contractor's being entitled to such payment appear to have been fulfilled in so far as it is Engineer's responsibility to observe the Work.

3. By recommending any such payment Engineer will not thereby be deemed to have represented that:

   a. inspections made to check the quality or the quantity of the Work as it has been performed have been exhaustive, extended to every aspect of the Work in progress, or involved detailed inspections of the Work beyond the responsibilities specifically assigned to Engineer in the Contract Documents; or

   b. there may not be other matters or issues between the parties that might entitle Contractor to be paid additionally by Owner or entitle Owner to withhold payment to Contractor.

4. Neither Engineer's review of Contractor's Work for the purposes of recommending payments nor Engineer's recommendation of any payment, including final payment, will impose responsibility on Engineer:

   a. to supervise, direct, or control the Work, or

Copyright © 2007 National Society of Professional Engineers for EJCDC. All rights reserved.

b. for the means, methods, techniques, sequences, or procedures of construction, or the safety precautions and programs incident thereto, or

c. for Contractor's failure to comply with Laws and Regulations applicable to Contractor's performance of the Work, or

d. to make any examination to ascertain how or for what purposes Contractor has used the moneys paid on account of the Contract Price, or

e. to determine that title to any of the Work, materials, or equipment has passed to Owner free and clear of any Liens.

5. Engineer may refuse to recommend the whole or any part of any payment if, in Engineer's opinion, it would be incorrect to make the representations to Owner stated in Paragraph 14.02.B.2. Engineer may also refuse to recommend any such payment or, because of subsequently discovered evidence or the results of subsequent inspections or tests, revise or revoke any such payment recommendation previously made, to such extent as may be necessary in Engineer's opinion to protect Owner from loss because:

a. the Work is defective, or completed Work has been damaged, requiring correction or replacement;

b. the Contract Price has been reduced by Change Orders;

c. Owner has been required to correct defective Work or complete Work in accordance with Paragraph 13.09; or

d. Engineer has actual knowledge of the occurrence of any of the events enumerated in Paragraph 15.02.A.

C. *Payment Becomes Due:*

1. Ten days after presentation of the Application for Payment to Owner with Engineer's recommendation, the amount recommended will (subject to the provisions of Paragraph 14.02.D) become due, and when due will be paid by Owner to Contractor.

D. *Reduction in Payment:*

1. Owner may refuse to make payment of the full amount recommended by Engineer because:

a. claims have been made against Owner on account of Contractor's performance or furnishing of the Work;

b. Liens have been filed in connection with the Work, except where Contractor has delivered a specific bond satisfactory to Owner to secure the satisfaction and discharge of such Liens;

c. there are other items entitling Owner to a set-off against the amount recommended; or

Copyright © 2007 National Society of Professional Engineers for EJCDC. All rights reserved.

d. Owner has actual knowledge of the occurrence of any of the events enumerated in Paragraphs 14.02.B.5.a through 14.02.B.5.c or Paragraph 15.02.A.

2. If Owner refuses to make payment of the full amount recommended by Engineer, Owner will give Contractor immediate written notice (with a copy to Engineer) stating the reasons for such action and promptly pay Contractor any amount remaining after deduction of the amount so withheld. Owner shall promptly pay Contractor the amount so withheld, or any adjustment thereto agreed to by Owner and Contractor, when Contractor remedies the reasons for such action.

3. Upon a subsequent determination that Owner's refusal of payment was not justified, the amount wrongfully withheld shall be treated as an amount due as determined by Paragraph 14.02.C.1 and subject to interest as provided in the Agreement.

14.03 *Contractor's Warranty of Title*

A. Contractor warrants and guarantees that title to all Work, materials, and equipment covered by any Application for Payment, whether incorporated in the Project or not, will pass to Owner no later than the time of payment free and clear of all Liens.

14.04 *Substantial Completion*

A. When Contractor considers the entire Work ready for its intended use Contractor shall notify Owner and Engineer in writing that the entire Work is substantially complete (except for items specifically listed by Contractor as incomplete) and request that Engineer issue a certificate of Substantial Completion.

B. Promptly after Contractor's notification, Owner, Contractor, and Engineer shall make an inspection of the Work to determine the status of completion. If Engineer does not consider the Work substantially complete, Engineer will notify Contractor in writing giving the reasons therefor.

C. If Engineer considers the Work substantially complete, Engineer will deliver to Owner a tentative certificate of Substantial Completion which shall fix the date of Substantial Completion. There shall be attached to the certificate a tentative list of items to be completed or corrected before final payment. Owner shall have seven days after receipt of the tentative certificate during which to make written objection to Engineer as to any provisions of the certificate or attached list. If, after considering such objections, Engineer concludes that the Work is not substantially complete, Engineer will, within 14 days after submission of the tentative certificate to Owner, notify Contractor in writing, stating the reasons therefor. If, after consideration of Owner's objections, Engineer considers the Work substantially complete, Engineer will, within said 14 days, execute and deliver to Owner and Contractor a definitive certificate of Substantial Completion (with a revised tentative list of items to be completed or corrected) reflecting such changes from the tentative certificate as Engineer believes justified after consideration of any objections from Owner.

D. At the time of delivery of the tentative certificate of Substantial Completion, Engineer will deliver to Owner and Contractor a written recommendation as to division of responsibilities

Copyright © 2007 National Society of Professional Engineers for EJCDC. All rights reserved.

pending final payment between Owner and Contractor with respect to security, operation, safety, and protection of the Work, maintenance, heat, utilities, insurance, and warranties and guarantees. Unless Owner and Contractor agree otherwise in writing and so inform Engineer in writing prior to Engineer's issuing the definitive certificate of Substantial Completion, Engineer's aforesaid recommendation will be binding on Owner and Contractor until final payment.

E. Owner shall have the right to exclude Contractor from the Site after the date of Substantial Completion subject to allowing Contractor reasonable access to remove its property and complete or correct items on the tentative list.

14.05 *Partial Utilization*

A. Prior to Substantial Completion of all the Work, Owner may use or occupy any substantially completed part of the Work which has specifically been identified in the Contract Documents, or which Owner, Engineer, and Contractor agree constitutes a separately functioning and usable part of the Work that can be used by Owner for its intended purpose without significant interference with Contractor's performance of the remainder of the Work, subject to the following conditions:

1. Owner at any time may request Contractor in writing to permit Owner to use or occupy any such part of the Work which Owner believes to be ready for its intended use and substantially complete. If and when Contractor agrees that such part of the Work is substantially complete, Contractor, Owner, and Engineer will follow the procedures of Paragraph 14.04.A through D for that part of the Work.

2. Contractor at any time may notify Owner and Engineer in writing that Contractor considers any such part of the Work ready for its intended use and substantially complete and request Engineer to issue a certificate of Substantial Completion for that part of the Work.

3. Within a reasonable time after either such request, Owner, Contractor, and Engineer shall make an inspection of that part of the Work to determine its status of completion. If Engineer does not consider that part of the Work to be substantially complete, Engineer will notify Owner and Contractor in writing giving the reasons therefor. If Engineer considers that part of the Work to be substantially complete, the provisions of Paragraph 14.04 will apply with respect to certification of Substantial Completion of that part of the Work and the division of responsibility in respect thereof and access thereto.

4. No use or occupancy or separate operation of part of the Work may occur prior to compliance with the requirements of Paragraph 5.10 regarding property insurance.

14.06 *Final Inspection*

A. Upon written notice from Contractor that the entire Work or an agreed portion thereof is complete, Engineer will promptly make a final inspection with Owner and Contractor and will notify Contractor in writing of all particulars in which this inspection reveals that the Work is incomplete or defective. Contractor shall immediately take such measures as are necessary to complete such Work or remedy such deficiencies.

Copyright © 2007 National Society of Professional Engineers for EJCDC. All rights reserved.

14.07 *Final Payment*

A. *Application for Payment:*

1. After Contractor has, in the opinion of Engineer, satisfactorily completed all corrections identified during the final inspection and has delivered, in accordance with the Contract Documents, all maintenance and operating instructions, schedules, guarantees, bonds, certificates or other evidence of insurance, certificates of inspection, marked-up record documents (as provided in Paragraph 6.12), and other documents, Contractor may make application for final payment following the procedure for progress payments.

2. The final Application for Payment shall be accompanied (except as previously delivered) by:

   a. all documentation called for in the Contract Documents, including but not limited to the evidence of insurance required by Paragraph 5.04.B.6;

   b. consent of the surety, if any, to final payment;

   c. a list of all Claims against Owner that Contractor believes are unsettled; and

   d. complete and legally effective releases or waivers (satisfactory to Owner) of all Lien rights arising out of or Liens filed in connection with the Work.

3. In lieu of the releases or waivers of Liens specified in Paragraph 14.07.A.2 and as approved by Owner, Contractor may furnish receipts or releases in full and an affidavit of Contractor that: (i) the releases and receipts include all labor, services, material, and equipment for which a Lien could be filed; and (ii) all payrolls, material and equipment bills, and other indebtedness connected with the Work for which Owner might in any way be responsible, or which might in any way result in liens or other burdens on Owner's property, have been paid or otherwise satisfied. If any Subcontractor or Supplier fails to furnish such a release or receipt in full, Contractor may furnish a bond or other collateral satisfactory to Owner to indemnify Owner against any Lien.

B. *Engineer's Review of Application and Acceptance:*

1. If, on the basis of Engineer's observation of the Work during construction and final inspection, and Engineer's review of the final Application for Payment and accompanying documentation as required by the Contract Documents, Engineer is satisfied that the Work has been completed and Contractor's other obligations under the Contract Documents have been fulfilled, Engineer will, within ten days after receipt of the final Application for Payment, indicate in writing Engineer's recommendation of payment and present the Application for Payment to Owner for payment. At the same time Engineer will also give written notice to Owner and Contractor that the Work is acceptable subject to the provisions of Paragraph 14.09. Otherwise, Engineer will return the Application for Payment to Contractor, indicating in writing the reasons for refusing to recommend final payment, in which case Contractor shall make the necessary corrections and resubmit the Application for Payment.

C. *Payment Becomes Due:*

Copyright © 2007 National Society of Professional Engineers for EJCDC. All rights reserved.

1. Thirty days after the presentation to Owner of the Application for Payment and accompanying documentation, the amount recommended by Engineer, less any sum Owner is entitled to set off against Engineer's recommendation, including but not limited to liquidated damages, will become due and will be paid by Owner to Contractor.

14.08 *Final Completion Delayed*

A. If, through no fault of Contractor, final completion of the Work is significantly delayed, and if Engineer so confirms, Owner shall, upon receipt of Contractor's final Application for Payment (for Work fully completed and accepted) and recommendation of Engineer, and without terminating the Contract, make payment of the balance due for that portion of the Work fully completed and accepted. If the remaining balance to be held by Owner for Work not fully completed or corrected is less than the retainage stipulated in the Agreement, and if bonds have been furnished as required in Paragraph 5.01, the written consent of the surety to the payment of the balance due for that portion of the Work fully completed and accepted shall be submitted by Contractor to Engineer with the Application for such payment. Such payment shall be made under the terms and conditions governing final payment, except that it shall not constitute a waiver of Claims.

14.09 *Waiver of Claims*

A. The making and acceptance of final payment will constitute:

1. a waiver of all Claims by Owner against Contractor, except Claims arising from unsettled Liens, from defective Work appearing after final inspection pursuant to Paragraph 14.06, from failure to comply with the Contract Documents or the terms of any special guarantees specified therein, or from Contractor's continuing obligations under the Contract Documents; and

2. a waiver of all Claims by Contractor against Owner other than those previously made in accordance with the requirements herein and expressly acknowledged by Owner in writing as still unsettled.

ARTICLE 15 – SUSPENSION OF WORK AND TERMINATION

15.01 *Owner May Suspend Work*

A. At any time and without cause, Owner may suspend the Work or any portion thereof for a period of not more than 90 consecutive days by notice in writing to Contractor and Engineer which will fix the date on which Work will be resumed. Contractor shall resume the Work on the date so fixed. Contractor shall be granted an adjustment in the Contract Price or an extension of the Contract Times, or both, directly attributable to any such suspension if Contractor makes a Claim therefor as provided in Paragraph 10.05.

15.02 *Owner May Terminate for Cause*

A. The occurrence of any one or more of the following events will justify termination for cause:

Copyright © 2007 National Society of Professional Engineers for EJCDC. All rights reserved.

1. Contractor's persistent failure to perform the Work in accordance with the Contract Documents (including, but not limited to, failure to supply sufficient skilled workers or suitable materials or equipment or failure to adhere to the Progress Schedule established under Paragraph 2.07 as adjusted from time to time pursuant to Paragraph 6.04);

2. Contractor's disregard of Laws or Regulations of any public body having jurisdiction;

3. Contractor's repeated disregard of the authority of Engineer; or

4. Contractor's violation in any substantial way of any provisions of the Contract Documents.

B. If one or more of the events identified in Paragraph 15.02.A occur, Owner may, after giving Contractor (and surety) seven days written notice of its intent to terminate the services of Contractor:

1. exclude Contractor from the Site, and take possession of the Work and of all Contractor's tools, appliances, construction equipment, and machinery at the Site, and use the same to the full extent they could be used by Contractor (without liability to Contractor for trespass or conversion);

2. incorporate in the Work all materials and equipment stored at the Site or for which Owner has paid Contractor but which are stored elsewhere; and

3. complete the Work as Owner may deem expedient.

C. If Owner proceeds as provided in Paragraph 15.02.B, Contractor shall not be entitled to receive any further payment until the Work is completed. If the unpaid balance of the Contract Price exceeds all claims, costs, losses, and damages (including but not limited to all fees and charges of engineers, architects, attorneys, and other professionals and all court or arbitration or other dispute resolution costs) sustained by Owner arising out of or relating to completing the Work, such excess will be paid to Contractor. If such claims, costs, losses, and damages exceed such unpaid balance, Contractor shall pay the difference to Owner. Such claims, costs, losses, and damages incurred by Owner will be reviewed by Engineer as to their reasonableness and, when so approved by Engineer, incorporated in a Change Order. When exercising any rights or remedies under this Paragraph, Owner shall not be required to obtain the lowest price for the Work performed.

D. Notwithstanding Paragraphs 15.02.B and 15.02.C, Contractor's services will not be terminated if Contractor begins within seven days of receipt of notice of intent to terminate to correct its failure to perform and proceeds diligently to cure such failure within no more than 30 days of receipt of said notice.

E. Where Contractor's services have been so terminated by Owner, the termination will not affect any rights or remedies of Owner against Contractor then existing or which may thereafter accrue. Any retention or payment of moneys due Contractor by Owner will not release Contractor from liability.

Copyright © 2007 National Society of Professional Engineers for EJCDC. All rights reserved.

F. If and to the extent that Contractor has provided a performance bond under the provisions of Paragraph 5.01.A, the termination procedures of that bond shall supersede the provisions of Paragraphs 15.02.B and 15.02.C.

15.03 *Owner May Terminate For Convenience*

A. Upon seven days written notice to Contractor and Engineer, Owner may, without cause and without prejudice to any other right or remedy of Owner, terminate the Contract. In such case, Contractor shall be paid for (without duplication of any items):

1. completed and acceptable Work executed in accordance with the Contract Documents prior to the effective date of termination, including fair and reasonable sums for overhead and profit on such Work;

2. expenses sustained prior to the effective date of termination in performing services and furnishing labor, materials, or equipment as required by the Contract Documents in connection with uncompleted Work, plus fair and reasonable sums for overhead and profit on such expenses;

3. all claims, costs, losses, and damages (including but not limited to all fees and charges of engineers, architects, attorneys, and other professionals and all court or arbitration or other dispute resolution costs) incurred in settlement of terminated contracts with Subcontractors, Suppliers, and others; and

4. reasonable expenses directly attributable to termination.

B. Contractor shall not be paid on account of loss of anticipated profits or revenue or other economic loss arising out of or resulting from such termination.

15.04 *Contractor May Stop Work or Terminate*

A. If, through no act or fault of Contractor, (i) the Work is suspended for more than 90 consecutive days by Owner or under an order of court or other public authority, or (ii) Engineer fails to act on any Application for Payment within 30 days after it is submitted, or (iii) Owner fails for 30 days to pay Contractor any sum finally determined to be due, then Contractor may, upon seven days written notice to Owner and Engineer, and provided Owner or Engineer do not remedy such suspension or failure within that time, terminate the Contract and recover from Owner payment on the same terms as provided in Paragraph 15.03.

B. In lieu of terminating the Contract and without prejudice to any other right or remedy, if Engineer has failed to act on an Application for Payment within 30 days after it is submitted, or Owner has failed for 30 days to pay Contractor any sum finally determined to be due, Contractor may, seven days after written notice to Owner and Engineer, stop the Work until payment is made of all such amounts due Contractor, including interest thereon. The provisions of this Paragraph 15.04 are not intended to preclude Contractor from making a Claim under Paragraph 10.05 for an adjustment in Contract Price or Contract Times or otherwise for expenses or damage directly attributable to Contractor's stopping the Work as permitted by this Paragraph.

Copyright © 2007 National Society of Professional Engineers for EJCDC. All rights reserved.

ARTICLE 16 – DISPUTE RESOLUTION

16.01 *Methods and Procedures*

A. Either Owner or Contractor may request mediation of any Claim submitted to Engineer for a decision under Paragraph 10.05 before such decision becomes final and binding. The mediation will be governed by the Construction Industry Mediation Rules of the American Arbitration Association in effect as of the Effective Date of the Agreement. The request for mediation shall be submitted in writing to the American Arbitration Association and the other party to the Contract. Timely submission of the request shall stay the effect of Paragraph 10.05.E.

B. Owner and Contractor shall participate in the mediation process in good faith. The process shall be concluded within 60 days of filing of the request. The date of termination of the mediation shall be determined by application of the mediation rules referenced above.

C. If the Claim is not resolved by mediation, Engineer's action under Paragraph 10.05.C or a denial pursuant to Paragraphs 10.05.C.3 or 10.05.D shall become final and binding 30 days after termination of the mediation unless, within that time period, Owner or Contractor:

1. elects in writing to invoke any dispute resolution process provided for in the Supplementary Conditions; or

2. agrees with the other party to submit the Claim to another dispute resolution process; or

3. gives written notice to the other party of the intent to submit the Claim to a court of competent jurisdiction.

ARTICLE 17 – MISCELLANEOUS

17.01 *Giving Notice*

A. Whenever any provision of the Contract Documents requires the giving of written notice, it will be deemed to have been validly given if:

1. delivered in person to the individual or to a member of the firm or to an officer of the corporation for whom it is intended; or

2. delivered at or sent by registered or certified mail, postage prepaid, to the last business address known to the giver of the notice.

17.02 *Computation of Times*

A. When any period of time is referred to in the Contract Documents by days, it will be computed to exclude the first and include the last day of such period. If the last day of any such period falls on a Saturday or Sunday or on a day made a legal holiday by the law of the applicable jurisdiction, such day will be omitted from the computation.

Copyright © 2007 National Society of Professional Engineers for EJCDC. All rights reserved.

17.03 *Cumulative Remedies*

A. The duties and obligations imposed by these General Conditions and the rights and remedies available hereunder to the parties hereto are in addition to, and are not to be construed in any way as a limitation of, any rights and remedies available to any or all of them which are otherwise imposed or available by Laws or Regulations, by special warranty or guarantee, or by other provisions of the Contract Documents. The provisions of this Paragraph will be as effective as if repeated specifically in the Contract Documents in connection with each particular duty, obligation, right, and remedy to which they apply.

17.04 *Survival of Obligations*

A. All representations, indemnifications, warranties, and guarantees made in, required by, or given in accordance with the Contract Documents, as well as all continuing obligations indicated in the Contract Documents, will survive final payment, completion, and acceptance of the Work or termination or completion of the Contract or termination of the services of Contractor.

17.05 *Controlling Law*

A. This Contract is to be governed by the law of the state in which the Project is located.

17.06 *Headings*

A. Article and paragraph headings are inserted for convenience only and do not constitute parts of these General Conditions.

Copyright © 2007 National Society of Professional Engineers for EJCDC. All rights reserved.

REQUIRED GENERAL CONTRACT CONDITIONS

1. Compliance with Air and Water Acts
   a. In compliance with the Clean Air Act, as amended, 41 U.S.C. Sec. 7401 et. seq., and the regulations of the Environmental Protection Agency with respect thereto, the CONTRACTOR agrees that:
      1 Any facility to be utilized in the performance of this contract or any subcontract shall not be a facility listed on the EPA List of Violating Facilities pursuant to 40 CFR 15.20.
      2 He will comply with all requirements of Section 114 of the Clean Air Act, as amended.
      3 Materials utilized in the project shall be free of any hazardous materials, except as may be specifically provided for in the specifications.
   b. If the CONTRACTOR encounters existing material on sites owned or controlled by the city/county or in material sources that are suspected by visual observation or smell to contain hazardous materials, the CONTRACTOR shall immediately notify the ENGINEER and the Locality. The Locality will be responsible for testing for and removal or disposition of hazardous materials on sites owned or controlled by the Locality. The Locality may suspend the work, wholly or in part during the testing, removal or disposition of hazardous materials on sites owned or controlled by the Locality.

2. Equal Employment Opportunity
   a. The CONTRACTOR will not discriminate against any employee or the applicant for employment because of race, color, religion, sex, or national origin. The CONTRACTOR will take affirmative action to ensure that applicants are employed, and that employees are treated during employment, without regard to their race, color, religion, sex, or national origin. Such action shall include, but not be limited to the following: employment, promotion, demotion, or transfer; recruitment or recruitment advertising; layoff or termination; rates of pay or other forms of compensation; and selection for training, including apprenticeship. The CONTRACTOR agrees to post in conspicuous places, available to employees and applicants for employment, notices to be provided by the Locality.
   b. The CONTRACTOR will, in all solicitations or advertisements for employees placed by or on behalf of the CONTRACTOR, state that all qualified applicants will receive consideration for employment without regard to race, color, religion, sex, or national origin.
   c. The CONTRACTOR will cause the foregoing provisions to be inserted in all subcontracts for any work covered by this contract so that such provisions will be binding upon each subcontractor, provided that the foregoing provisions shall not apply to contracts or subcontracts for standard commercial supplies or raw materials.
   d. CONTRACTOR's are encouraged to participate in voluntary associations which assist in fulfilling their affirmative action obligations.
   e. A single goal for minorities and a separate single goal for women have been established. The CONTRACTOR, however, is required to provide equal employment opportunity and to take affirmative action for all minority groups, both male and female, and all women, both minority and non-minority.
   f. The CONTRACTOR shall not use the goals and timetables or affirmative action standards to discriminate against any person because of race, color, religion, sex, or national origin.
   g. The CONTRACTOR shall not enter into any Subcontract with any person or firm debarred from Government contracts.
   h. Nothing herein provided shall be construed as a limitation upon the application of other laws

which establish different standards of compliance or upon the application of requirements for the hiring of local or other area residents.

3. Affirmative Action for Handicapped Workers
   a. The CONTRACTOR will not discriminate against any employee or applicant for employment because of physical or mental handicap in regard to any position for which the employee or applicant for employment is qualified. The CONTRACTOR agrees to take affirmative action to employ, advance in employment and otherwise treat qualified handicapped individuals without discrimination based upon their physical or mental handicap in all employment practices such as the following: employment, promotion, demotion or transfer, recruitment, advertising, layoff or termination, rates of pay or other forms of compensation, and selection for training, including apprenticeship.

4. Section 109 of the Housing and Community Development Act of 1974
   a. No person in the United States shall on the ground of race, color, national origin, or sex be excluded from participation in, be denied the benefits of, or be subjected to discrimination under any program or activity funded in whole or in part with funds made available under this title.

5. The Provision of Local Training, Employment, and Business Opportunities
   a. To the greatest extent feasible opportunities for training and employment be given lower income residents of the project area and contracts for work in connection with the project be awarded to business concerns which are located in, or owned in substantial part by persons residing in the area of the project.
   b. The CONTRACTOR will include this clause in every subcontract for work in connection with the project.

6. Non-Segregated Facilities
   The CONTRACTOR certifies that he does not and will not maintain or provide for his employees any segregated facilities at any of his establishments, and that he does not and will not permit his employees any segregated facilities at any of his establishments, or permit his employees to perform their services at any location, under his control, where segregated facilities are maintained. As used in this paragraph the term "segregated facilities" means any waiting rooms, work areas, rest rooms and washrooms, restaurants and other eating areas, time clocks, locker rooms and other storage or dressing areas, parking lots, drinking fountains, recreation or entertainment areas, transportation, and housing facilities provided for employees which are segregated by explicit directive or are in fact segregated on the basis of race, creed, color, or national origin, because of habit, local custom, or otherwise.

7. ADA Compliance and CONTRACTOR Responsibility
   Contractor is responsible for all ADA/TDLR Compliance and regulations in construction of project per the approved plan review set and final inspection performed at Owners expense. Five percent (5%) retainage will be held until inspection approval has been obtained.

8. Payment Retainage
   For partial payment, a retainage amount of five percent (5%) will be held until final payment is made to the Contractor.

SPECIAL CONDITIONS
(SUPPLEMENTAL TO THE GENERAL CONDITIONS)

SC 1.00 GENERAL

The provisions of this section of the specifications shall govern in the event of any conflict between them and the "General Conditions of Agreement".

Titles to divisions and paragraphs in these CONTRACT DOCUMENTS are introduced merely for convenience and are not to be taken as a part of the specifications and are, furthermore, not to be taken as a correct or complete segregation of the several units of material and labor. No responsibility, either direct or implied, is assumed by the ENGINEER for omissions or duplications by the CONTRACTOR or his SUBCONTRACTOR, due to real or alleged error in arrangement of matter in these CONTRACT DOCUMENTS.

SC 1.01 DEFINED TERMS

ENGINEER

The word "ENGINEER" in these Specifications shall be understood as referring to the City ENGINEER, City of Huntsville or such other Engineer, Supervisor or Inspector as may be authorized by said OWNER to act in any particular position.

OWNER

The word "OWNER" in these specifications shall be understood as referring to the City of Huntsville, 1212 Avenue M, Huntsville, Texas 77340.

Substantial Completion

The terms used in these Supplementary Conditions which are defined in the Standard General Conditions of the Construction Contract have the meaning assigned to them in the General Conditions, except for the terms "General Requirements." The term "General Requirements" is not applicable to this Contract, and items referenced as appearing in that section will be located in the Technical Specifications or these Supplemental General Conditions.

The term "Substantial Completion" is further defined as follows:

Substantial Completion - Additional Clarification

The project shall not be considered Substantially Complete until the following minimum conditions have been met:

1) All major individual items of construction, must be sufficiently complete in accordance with the Contract Documents so that the individual item of construction can be utilized for the purposes for which it is intended.
2) Required tests, such as air, hydrostatic pressure, water tightness, compaction, and others, including

trial operating tests, as outlined in the Technical Specifications must be successfully completed. Any items which fail any of the tests must be corrected and retested.

3) A preliminary final inspection must have been requested by the CONTRACTOR and, allowing adequate time for the presence of all necessary parties, conducted by the ENGINEER. Such pre-final inspection must show that 1 and 2 above have been accomplished. The punch list developed at the pre-final must not contain any major deficiencies.

As of the date that items 1 through 3 above have been completed, the ENGINEER shall issue the Certificate of Substantial Completion, which shall act to initiate the guarantee period and to stop the assessment of additional liquidated damages (if the agreed-upon time has expired) as of that date.

The Certificate shall provide a mutually agreed upon reasonable period of time for completion of the punch list items, and failure of the CONTRACTOR to complete the punch list items within this period shall be cause for the OWNER to reinstate the withholding of liquidated damages in the amount and under the terms previously specified in the Contract.

Add the following definitions:

Term Definitions

The word "Approved" means to give limited, or conditional, or qualified permission to use material, equipment, or methods, the conditions being in strict compliance with contract document requirements.

The words "Furnish", or "Install", or "Provide" mean to supply, make available, place and/or fix into position. These words are used interchangeably.

The word "Inspection" means to make general, periodic visual observations of the material and installation, but not detailed continuous, or specific analysis of same. The ENGINEER'S inspections are only a periodic, cursory construction review, and the CONTRACTOR is solely responsible for compliance with the Construction Documents.

SC 3.03.B.1.c

Add the following language at the end of paragraph 3.03.B.1 of the General Conditions:

c. In case of conflict between the drawings and specifications, the specifications shall govern. Figure dimensions on drawings shall govern over scale dimensions, and detailed drawings shall govern over general drawings.

SC 4.02.A.1

Add the following language in lieu of paragraph 4.02.A.1 of the General Conditions:

The CONTRACTOR is hereby notified that the OWNER has not conducted subsurface soil investigations within the area in which the project is to be constructed. It shall be the CONTRACTOR'S sole responsibility to determine to his satisfaction the subsurface condition of

the soil. All excavation is considered incidental to the amount bid for other items, and there shall be no additional allowance for rock excavation, or for unstable soils, if encountered.

SC 4.03.C.3

Amend Section 4.03.C.3. of the General Conditions as follows:

3. If Owner and Contractor are unable to agree on entitlement to or on the amount or extent, if any, of any adjustment in the Contract Price or Contract Times, or both, a Claim may be made therefore as provided in Paragraph 10.05. However, Owner and Engineer, and any of their Related Entities shall not be liable to Contractor for any claims, costs, losses, or damages (including but not limited to all fees and charges of engineers, architects, attorneys, and other professionals and all court or other dispute resolution costs) sustained by Contractor on or in connection with any other project or anticipated project.

SC 5.03.B

Added the following language to Section 5.03:

B. Owner may deliver to Contractor, with copies to each additional insured identified in the Supplementary Conditions, certificates of insurance (and other evidence of insurance requested by Contractor or any other additional insured) which Owner is required to purchase and maintain.

SC 5.04.C

1. The CONTRACTOR will not be issued a "Notice to Proceed" on this contract until he has obtained all the insurance required under this section and such insurance has been approved by the OWNER or its representative.

2. The CONTRACTOR shall purchase and maintain such insurance as will protect him from claims set forth below which may arise out of or result from the CONTRACTOR'S execution of the WORK, whether such execution be by himself or by any SUBCONTRACTOR or by anyone directly or indirectly employed by any of them, or by anyone for whose acts any of them may be liable.

    a. Claims under workman's compensation, disability benefit and other similar employee benefit acts;
    b. Claims for damage because of bodily injury, occupational sickness or disease, or death of his employees;
    c. Claims for damage because of bodily injury, sickness or disease, or death of any other than his employees;
    d. Claims for damage insured by usual personal injury liability coverage which are sustained (1)by any person as a result of an offense directly or indirectly related to the employment of such person by the CONTRACTOR, or (2) by any other person; and
    e. Claims for damages because of injury to or destruction of tangible property, including loss of use resulting therefrom.

3. Certificates of Insurance acceptable to the OWNER shall be filed with the OWNER prior to commencement of the WORK. These Certificates shall state the policy types, amounts, class of operations covered, effective dates of expiration and shall contain a provision that coverages afforded under the policies will not be canceled or materially altered except after fifteen (15) days prior WRITTEN NOTICE has been received by the OWNER.

4. The CONTRACTOR shall procure and maintain, at his own expense during the CONTRACT TIME, liability insurance as hereinafter specified:
   a. The CONTRACTOR shall procure and maintain, at his own expense during the CONTRACT TIME, liability insurance as hereinafter specified;
      (1) CONTRACTOR'S General Public Liability and Property Damage Insurance including vehicle coverage issued to the CONTRACTOR and protecting him from all claims for personal injury, including death, and all claims for destruction of or damage to property, arising out of or in connection with any operations under the CONTRACT DOCUMENTS, whether such operations be by himself, or by any SUBCONTRACTOR under him, or anyone directly or indirectly employed by the CONTRACTOR or by a SUBCONTRACTOR under him. The awarded responder shall furnish and keep in full force (at its own cost and expense) the following insurance during the term of this Contract:
      (2) Workers Compensation/Employers Liability Insurance**:** The Contractor shall take out and maintain during the life of this contract, Employers' Liability and Worker's Compensation Insurance for all of their employees employed at the site of the work, and in case any work is sublet, the Contractor shall require the subcontractor similarly to provide Worker's Compensation Insurance for all of the latter's employees unless such employees are covered by the protection afforded by the Contractor. The City of Huntsville requires a waiver of subrogation against the City.
      (3) Commercial General Liability at minimum combined single limits of ($1,000,000 per occurrence and $2,000,000 general aggregate) for bodily injury and for property damages, which coverage shall include products/completed operations at $1,000,000 per occurrence.
      (4) Commercial Automobile Liability at minimum combined single limits of $300,000 per occurrence for Bodily Injury and Property Damage, including owned, non-owned, and hired vehicle coverage.
      (5) Professional Liability Insurance shall be $1,000,000 per occurrence.
      (6) Builders Risk Insurance for "each" housing unit/structure in the amount of $100,000 if applicable.
      (7) Product Liability Insurance will be required when applicable.
   b. All insurance must be written on forms filed with and approved by the Texas Board of Insurance. Certificates of Insurance shall be prepared and executed by the insurance company or its authorized agent.
   c. The awarded responder shall furnish at their own expense to the City of Huntsville, a Certificate of Liability Insurance listing the City as an "**Additional Named Insured"** via endorsement.
   d. The required insurance must contain a provision that at least thirty (30) days prior notice of cancellation, non-renewal, or material change of said insurance shall be submitted to the city, by the insurance company. The City reserves the right to full, certified copies of all required

insurance policies when requested in writing. Insurance will be required prior to purchase order being issued.

e. Original of insurance policy must be enclosed in bid packet.

(1) The CONTRACTOR shall acquire and maintain, if applicable, Fire and Extended Coverage insurance upon the PROJECT to the full insurable value thereof for the benefit of the OWNER, the CONTRACTOR, and SUBCONTRACTOR as their interest may appear. This provision shall in no way release the CONTRACTOR or CONTRACTOR'S surety from obligations under the CONTRACT DOCUMENTS to fully complete the PROJECT.

5. The CONTRACTOR shall procure and maintain, at his own expense, during the CONTRACT TIME, in accordance with the provisions of the laws of the state in which the work is performed, Workmen's Compensation Insurance

SC 5.06, A.

Amend Section 5.06, A. of the General Conditions as follows:

> "A. Unless otherwise provided in the Supplementary Conditions, Owner may purchase and maintain property insurance upon the Work at the Site in the amount of the full replacement cost thereof (subject to such deductible amounts as may be provided in the Supplementary Conditions or required by Laws and Regulations). This insurance shall: "

SC 5.06, B.

Amend Section 5.06, B. of the General Conditions as follows:

> "B. Owner may purchase and maintain such boiler and machinery insurance or additional property insurance as may be required by the Supplementary Conditions or Laws and Regulations which will include the interests of Owner, Contractor, Subcontractors, and Engineer, and any other individuals or entities identified in the Supplementary Conditions, and the officers, directors, partners, employees, agents, consultants and subcontractors of each and any of them, each of whom is deemed to have an insurable interest and shall be listed as an insured or additional insured. "

SC 5.06, E.

Delete paragraph 5.06, E. of the General Conditions in its entirety and insert the following in its place:

> "E. If CONTRACTOR requests in writing that other special insurance be included in the property insurance policies provided under paragraph 5.06, OWNER may, if possible, include such insurance, and the cost thereof will be charged to the CONTRACTOR by appropriated Change Order or Written Amendment. Prior to commencement of the Work at the Site, OWNER shall in writing advise CONTRACTOR whether or not such other insurance has been procured by OWNER."

SC 5.07

Workers' Compensation Insurance Coverage

A. Definitions:

Certificate of coverage ("certificate") - A copy of a certificate of insurance, a certificate of authority to self-insure issued by the commission, or a coverage agreement (TWCC-81, TWCC-82, TWCC-83, or TWCC-84), showing statutory workers' compensation insurance coverage for the person's or entity's employees providing services on a project, for the duration of the project.

Duration of the project - Includes the time from the beginning of the work on the project until the CONTRACTOR'S/person's work on the project has been completed and accepted by the governmental entity.

Persons providing services on the project ("subcontractor" in 406.096) - Includes all persons or entities performing all or part of the services the CONTRACTOR has undertaken to perform on the project, regardless of whether that person contracted directly with the CONTRACTOR and regardless of whether that person has employees. This includes, without limitation, independent CONTRACTORS, subcontractors, leasing companies, motor carriers, owner-operators, employees of any such entity, or employees of any entity which furnishes persons to provide services on the project. "Services" include, without limitation, providing, hauling, or delivering equipment or materials, or providing labor, transportation, or other service related to a project. "Services" does not include activities unrelated to the project, such as food/beverage vendors, office supply deliveries, and delivery of portable toilets.

B. The CONTRACTOR shall provide coverage, based on proper reporting of classification codes and payroll amounts and filing of any coverage agreements, which meets the statutory requirements of Texas Labor Code, Section 401.011 (44) for all employees of the CONTRACTOR providing services on the project, for the duration of the project.

C. The CONTRACTOR must provide a certificate of coverage to the governmental entity prior to being awarded the contract.

D. If the coverage period shown on the CONTRACTOR'S current certificate of coverage ends during the duration of the project, the CONTRACTOR must, prior to the end of the coverage period, file a new certificate of coverage with the governmental entity showing that coverage has been extended.

E. The CONTRACTOR shall obtain from each person providing services on a project, and provide to the governmental entity:

1) a certificate of coverage, prior to that person beginning work on the project, so the governmental entity will have on file certificates of coverage showing coverage for all persons providing services on the project; and
2) no later than seven days after receipt by the CONTRACTOR, a new certificate of coverage showing extension of coverage, if the coverage period shown on the current certificate of coverage ends during the duration of the project.

F. The CONTRACTOR shall retain all required certificates of coverage for the duration of the project and for one year thereafter.

G. The contractor shall notify the governmental entity in writing by certified mail or personal delivery, within 10 days after the CONTRACTOR knew or should have known, of any change that materially affects the provision of coverage of any person providing services on the project.

H. The CONTRACTOR shall post on each project site a notice, in the text, form and manner prescribed by the Texas Workers' Compensation Commission, informing all persons providing services on the project that they are required to be covered, and stating how a person may verify coverage and report lack of coverage.

I. The CONTRACTOR shall contractually require each person with whom it contracts to provide services on a project, to:

1) provide coverage, based on proper reporting classification codes and payroll amounts and filing of any coverage agreements, which meets the statutory requirements of Texas Labor Code, Section 401.011 (44) for all of its employees providing services on the project, for the duration of the project;
2) provide to the CONTRACTOR, prior to that person beginning work on the project, a certificate of coverage showing that coverage is being provided for all employees of the person providing services on the project for the duration of the project;
3) provide the CONTRACTOR, prior to the end of the coverage period, a new certificate of coverage showing extension of coverage, if the coverage period shown on the current certificate of coverage ends during the duration of the project;
4) obtain from each other person with whom it contracts, and provide to the CONTRACTOR:
   a) a certificate of coverage prior to the other person beginning work on the project; and
   b) a new certificate of coverage showing extension of coverage, prior to the end of the coverage period, if the coverage period shown on the current certificate of coverage ends during the duration of the project;
5) retain all required certificates of coverage on file for the duration of the project and for one year thereafter;
6) notify the governmental entity in writing by certified mail or personal delivery, within 10 days after the person knew or should have known, of change that materially affects the provision of coverage of any person providing services on the project; and
7) contractually require each person with whom it contracts, to perform as required by paragraphs 1) - 7), with the certificates of coverage to be provided to the person for whom they are providing services.

J. By signing this contract or providing or causing to be provided a certificate of coverage, the CONTRACTOR is representing to the governmental entity that all employees of the CONTRACTOR who will provide services on the project will be covered by workers' compensation coverage for the duration of the project, that the coverage will be based on proper reporting of classification codes and payroll amounts, and that all coverage agreements will be filed with the appropriate insurance carrier or, in the case of a self-insured, with the commission's Division of Self-Insurance Regulation. Providing false or misleading information may subject the CONTRACTOR to administrative penalties, criminal penalties, civil penalties, or other civil

actions.

K. The CONTRACTOR'S failure to comply with any of these provisions is a breach of contract by the CONTRACTOR which entitles the governmental entity to declare the contract void if the CONTRACTOR does not remedy the breach within ten days after receipt of notice of breach from the governmental entity.

28 Texas Administrative Code section 110.110 (1994).

1. The CONTRACTOR shall secure, if applicable, "All Risk" type Builder's Risk Insurance for WORK to be performed. Unless specifically authorized by the OWNER, the amount of such insurance shall not be less than the CONTRACT PRICE totaled in the BID. The policy shall cover not less than the losses due to fire, explosion, hail, lighting, vandalism, malicious mischief, wind, collapse, riot, aircraft, and smoke during the CONTRACT TIME, and until the WORK is accepted by the OWNER. The policy shall name as the insured the CONTRACT, the ENGINEER, and the OWNER.

NOTE: If this paragraph is included in this Contract, the remaining paragraphs of Article 5 are hereby renumbered as 5.08 through 5.11. Any reference in these documents to the original paragraphs 5.07 through 5.10 are hereby changed accordingly.

SC 6.02.B

Add the following sentence at the end of paragraph 6.02.B, to read as follows:

The CONTRACTOR shall reimburse the OWNER for any overtime compensation required to be made to resident project representative due to CONTRACTOR'S working hours before 8:00 a.m. or after 5:00 p.m., or on Saturday and Sunday.

SC 6.06. H., I., J., K. and L

Add the following paragraphs after 6.06. G. in the General Conditions:

H. The CONTRACTOR may utilize the services of specialty SUBCONTRACTORS on those parts of the WORK which, under normal contracting practices, are performed by specialty SUBCONTRACTORS.

I. The CONTRACTOR shall not award WORK to SUBCONTRACTOR(S); in excess of fifty (50%) percent of the CONTRACT PRICE, without prior written approval of the OWNER.

K. The CONTRACTOR shall cause appropriate provisions to be inserted in all subcontracts relative to the WORK to bind SUBCONTRACTORS to the CONTRACTOR by the terms of the CONTRACT DOCUMENTS insofar as applicable to the WORK of SUBCONTRACTORS and to give the CONTRACTOR the same power as regards terminating any subcontract that the OWNER may exercise over the CONTRACTOR under any provision of the CONTRACT DOCUMENTS.

L. Nothing contained in this CONTRACT shall create any contractual relation between any SUBCONTRACTOR and the OWNER.

SC 6.10

Add the following language to the end of paragraph 6.10 of the General Conditions:

OWNER is a governmental entity, and as such, is exempt from certain taxes as described in Vernon's Annotated Texas Code, Tax Code 151.309 and 151.056.

In order that this be considered a "separated" contract, CONTRACTOR shall provide a breakout, in detail, satisfactory to the OWNER, of the costs of materials incorporated in the work for inclusion in the contract. If appropriate, OWNER shall issue an exemption certificate for these materials.

The CONTRACTOR shall be responsible for providing or obtaining of resale certificate, for requesting exemption certificates, and for all other associated paperwork, and shall include in his bid any and all sales or use taxes for which an exemption certificate cannot be provided by the OWNER. Should the CONTRACTOR fail to properly claim said exemptions, there shall be no additional cost to the OWNER.

SC 6.13.C

Add the following language to the end of paragraph 6.13 of the General Conditions:

C. In order to provide safety controls for protection to the life and health of employees and other persons; for prevention of damage to property, materials, and supplies; and for the performance of this Contract; the CONTRACTOR will comply with all pertinent provisions of the "Occupational Safety and Health Act of 1970" (84 Stat. 1580; 29 USC. 650 et seq.), with special attention given to "Part 1926, Subpart P - Safety and Health Regulations for Construction", found in 36 F.R. Number 75, Part II of the "Federal Register" dated April 17, 1971, and 36 F.R. 25232, December 30, 1971, and 54 F.R. No. 209 dated October 31, 1989, and to CFR 1910 146 pertaining to work in confined spaces.

The CONTRACTOR will maintain an accurate record of, and will report to the OWNER, exposure data and all accidents resulting in death, traumatic injury, occupational disease, and/or damage to property, materials, supplies and equipment incident to work performed under this Contract.

The OWNER may notify the CONTRACTOR of any non-compliance with the foregoing provisions. The CONTRACTOR shall, after receipt of such notice, immediately correct the conditions. Such notice, when delivered to the CONTRACTOR or his representative at the site of the work, shall be deemed sufficient for the purpose.

The CONTRACTOR shall indemnify and save harmless the OWNER and the ENGINEER from any claims for damages resulting from personal injury and/or death suffered or alleged to have been suffered by any person as a result of any work conducted under this Contract.

Compliance with these safety provisions by subcontractors will be the responsibility of the CONTRACTOR.

These drawings and specifications do not, except to the extent necessary to comply with HB 1569 of the

1989 Texas Legislature (relating to trench excavation), include necessary provisions for construction safety. It is the CONTRACTOR'S sole responsibility to see that all government safety standards are complied with, and that the site of the work is safe. The OWNER may exercise his rights outlined above, but failure of the OWNER to exercise these rights shall not relieve the CONTRACTOR of responsibility, nor shall it make the OWNER nor the ENGINEER, in any way liable.

For the CONTRACTOR'S guidance, excerpts from Subpart P Safety and Health Regulations Part 1926, "Excavations, Trenching and Shoring" are included at the end of these Supplemental General Conditions:

The following should be noted in addition to the Subpart P excerpts:

1. A bid item has been included on the bid schedule for Trench Protection Requirements, if the ENGINEER feels that there will be any trench excavation greater than 5 feet in depth. Protection of trenches less than 5 feet in depth will be considered an incidental item of work. The bid item is intended to compensate for excavation protection requirements on trenches, as well as structures such as lift stations, manholes, bore pits, and similar non-pipeline excavations in excess of five feet deep. The OWNER has no special shoring requirements beyond those of state and federal law and regulations.

It is hereby recognized by all parties that the use of the diagrams and specifications outlined herein do not in any way represent a warranty or guarantee of a safe trench condition. Rather, they represent design approaches consistent with generally accepted practice. The CONTRACTOR hereby warrants and assures the ENGINEER and the OWNER that he will comply fully with the requirements of Subpart P, Part 1926, Safety and Health Regulations, as applicable to this CONTRACT and further agrees to, and will, indemnify and hold the ENGINEER and the OWNER entirely harmless of and from any and all claims, demands, causes of action, or expense of any kind or nature whatsoever arising out of or in any way related to the failure of the CONTRACTOR or any other subcontractor to comply strictly with said requirements.

SC 6.20

Add the following language to the end of Section 6.20:

D. OWNER INDEMINFICATION

1. **The CONTRACTOR agrees to and shall indemnify and hold harmless the OWNER, its officers, agents and employees from and against any and all claims, losses damages, causes of action, suits and liability of every kind, including all expenses of litigation, court costs, attorney's fees, for injury to or death of any person, or for damage to any property, or for breach of contract, arising out of or in connection with the work done by the CONTRACTOR under this agreement.**
2. **The CONTRACTOR shall indemnify and hold OWNER harmless from any claims of material suppliers, mechanics, laborers, or other subcontractors.**

3. **The CONTRACTOR shall indemnify and hold OWNER harmless from any and all injuries to or claims of adjacent property owners caused by the CONTRACTOR, its agents, employees, and representatives.**

SC 7.01 Related Work at Site

In case of simultaneous work being performed on site by multiple contractors, insert the following in lieu of section 7.01.A

A. Owner may perform other work related to the Project at the Site by OWNER'S employees, or let other direct contracts therefor, or have other work performed by other contractors.

SC 7.03

If there are to be multiple contractors on the site simultaneously then add the following new paragraph immediately after paragraph GC-7.02:

SC-7.03 Claims Between Contractors

A. Should CONTRACTOR cause damage to the work or property of any separate contractor at the Site, or should any claim arising out of CONTRACTOR's performance of the Work at the Site be made by any separate contractor against CONTRACTOR, OWNER, ENGINEER, ENGINEER's Consultants, or the construction coordinator, CONTRACTOR shall promptly attempt to settle with such separate contractor by agreement, or to otherwise resolve the dispute by arbitration or at law.

B. CONTRACTOR shall, to the fullest extent permitted by Laws and Regulations, indemnify and hold harmless OWNER, ENGINEER, ENGINEER's Consultants, the construction coordinator and the officers, directors, partners, employees, agents and other consultants and subcontractors of each and any of them from and against all claims, costs, losses and damages (including, but not limited to, fees and charges of engineers, architects, attorneys, and other professionals and court and arbitration costs) arising directly, indirectly or consequentially out of any action, legal or equitable, brought by any separate contractor against OWNER, ENGINEER, ENGINEER's Consultants, or the construction coordinator to the extent said claim is based on or arises out of CONTRACTOR's performance of the Work. Should a separate contractor cause damage to the Work or property of CONTRACTOR or should the performance of work by any separate contractor at the Site give rise to any other Claim, CONTRACTOR shall not institute any action, legal or equitable, against OWNER, ENGINEER, ENGINEER's Consultants, or the construction coordinator or permit any action against any of them to be maintained and continued in its name or for its benefit in any court or before any arbiter which seeks to impose liability on or to recover damages from OWNER, ENGINEER, ENGINEER's Consultants or the construction coordinator on account of any such damage or Claim.

C. If CONTRACTOR is delayed at any time in performing or furnishing Work by any act or neglect of a separate contractor, and OWNER and CONTRACTOR are unable to agree as to the extent of any adjustment in Contract Times attributable thereto, CONTRACTOR may make a Claim for an extension of times in accordance with Article 12. An extension of the Contract Times shall be

CONTRACTOR's exclusive remedy with respect to OWNER, ENGINEER, ENGINEER's Consultants, and construction coordinator for any delay, disruption, interference, or hindrance caused by any separate contractor. This paragraph does not prevent recovery from OWNER, ENGINEER, ENGINEER's Consultant, or construction coordinator for activities that are their respective responsibilities.

SC 10.01

Add the following language at the end of paragraph 10.1 of the General Conditions:

Change orders on this project must also be approved by the Texas Parks and Wildlife Department, in addition to the OWNER and the CONTRACTOR.

SC 12.01.B.4

Add the following language as paragraph 12.01.B.4. to the General Conditions:

Where CONTRACTOR fails to complete the work within the number of days specified in the Bid Proposal and Standard Form of Agreement from the date specified in the written "Notice to Proceed" plus any additional time allowed, liquidated damages will be accessed. The liquidated damages will be deducted from any monies due or which may thereafter become due to the CONTRACTOR at the rate specified in the Bid Proposal, not as a penalty, but as ascertained and liquidated damages.

SC 12.03.B.

Add the following language as paragraph 12.03.B. to the General Conditions:

B. If Owner, Engineer, or other contractors or utility owners performing other work for Owner as contemplated by Article 7, or anyone for whom Owner is responsible, delays, disrupts, or interferes with the performance or progress of the Work, then Contractor shall be entitled to an equitable adjustment in the Contract Price or the Contract Times , or both. Contractor's entitlement to an adjustment of the Contract Times is conditioned on such adjustment being essential to Contractor's ability to complete the Work within the Contract Times, however no compensatory damages or anticipated lost profits or other economic loss shall be awarded.

SC 13.03.B.4

Add the following language as paragraph 13.03.B.4 of the General Conditions:

<u>Re-Testing</u>

Regardless of whether the OWNER is providing testing or the CONTRACTOR is providing testing, in the event that initial tests of the material or workmanship indicate that it does not meet the specifications, the CONTRACTOR shall bear all costs of retesting said materials or workmanship.

SC 13.07

Add the following paragraph after paragraph 13.07 of the General Conditions:

The ENGINEER and OWNER shall make a warranty inspection during the twelfth month of the warranty period, and will notify CONTRACTOR of any defective work. Further, in the event the CONTRACTOR'S performance and payment bonds are to expire prior to the time the reported defects can be corrected, then said bonds shall automatically be extended, without any action or notice from the OWNER or his agents, until such time as the project defects are corrected.

SC 14.02.B.1.

Amend Section 14.02.B.1 of the General Conditions as follows:

1. Engineer will, within 20 days after receipt of each Application for Payment, either indicate in writing a recommendation of payment and present the Application to Owner or return the Application to Contractor indicating in writing Engineer's reasons for refusing to recommend payment. In the latter case, Contractor may make the necessary corrections and resubmit the Application.

SC 15.03.A.2

Amend section 15.03.A.2 of the General Conditions as follows:

2. expenses sustained prior to the effective date of termination of performing services and furnishing labor, materials, or equipment as required by the Contract Documents in connection with uncompleted Work, including fair and reasonable sums for overhead on such Work;

SC 15.03.A.3

Amend Section 15.03.A of the General Conditions by deleting section A.3 in its entirety:

SC 16.01.C.1

Amend Section 16.01.C.1 of the General Conditions as follows:

1. elects in writing to invoke any dispute resolution process provided for in the Supplementary Conditions, however this election does not include arbitration in any form or fashion, whether or not in the Supplementary Conditions, or

SC 16.01.C.2

Amend Section 16.01.C.2 of the General Conditions as follows:

2. agrees with the other party to submit the Claim to another dispute resolution process, excluding arbitration, or

SC 17.05.A

Amend Section 17.05.A of the General Conditions as follows:

A. This Contract is to be governed by the law of the state of Texas in which the Project is located and venue shall be in Walker County, Texas.

SC 17.07

Add the following as paragraph 17.07 in the General Conditions:

17.07 ***Limitation of Liability***

A. ENGINEER: The CONTRACTOR is skilled and experienced in the use and interpretation of drawings and specifications such as those included in the bid documents for this contract. He has carefully reviewed the drawings and specifications and has found them free of ambiguities and sufficient for bid purposes. Further, he has based his bid solely on those documents not relying in any way on any explanation or interpretation, oral or written, from any other source. Having assured himself of the adequacy of the documents and the accuracy of his bid, the CONTRACTOR agrees (and shall require his subcontractors to agree) to limit the liability of the Design Professional (McClure & Browne Engineering/Surveying, Inc. its professional employees and subcontractors) and the OWNER for professional negligence, errors or omissions of the Design Professional to a total aggregate sum of $100,000 or Design Professional's total fee for services rendered on this project, whichever is greater. The CONTRACTOR does not assume any liability for damages to others caused by the professional negligence, errors or omissions of the Design Professional.

B. OWNER:

1. **The CONTRACTOR agrees to and shall indemnify and hold harmless the OWNER, its officers, agents and employees from and against any and all claims, losses damages, causes of action, suits and liability of every kind, including all expenses of litigation, court costs, attorney's fees, for injury to or death of any person, or for damage to any property, or for breach of contract, arising out of or in connection with the work done by the CONTRACTOR under this agreement.**
2. **The CONTRACTOR shall indemnify and hold OWNER harmless from any claims of material suppliers, mechanics, laborers, or other subcontractors.**
3. **The CONTRACTOR shall indemnify and hold OWNER harmless from any and all injuries to or claims of adjacent property owners caused by the CONTRACTOR, its agents, employees, and representatives.**

SC 17.08

Add the following as paragraph 17.08 in the General Conditions:

17.08 *Equal Employment Opportunity*

(1) The CONTRACTOR will not discriminate against any employee or applicant for employment because of race, religion, color, sex, or national origin. The CONTRACTOR will take affirmative action to ensure that applicants are treated during employment, without regard to their race, creed, color, or national origin. Such action shall include, but not be limited to, the following: employment, upgrading; demotion or transfer; recruitment or recruitment advertising; layoff or termination; rates of pay or other forms of compensation; and selection for training, including apprenticeship. The CONTRACTOR agrees to post in conspicuous places, available to employees and applicants for employment, notices to be provided by the contracting officer setting forth the provision of this nondiscrimination clause.

(2) The CONTRACTOR will, in all solicitations or advertisements for employees placed by or on behalf of the CONTRACTOR, state that all qualified applicants will receive consideration for employment without regard to race, religion, color, sex, or national origin.

(3) The CONTRACTOR will send to each labor union or representative of workers which he has a collective bargaining agreement or other contract or understanding, a notice, to be provided by the agency contracting officer, advising the labor union or workers' representative of the CONTRACTOR'S commitments under Section 202 of Executive Order No. 11246 as amended (3CFR 169 (1974), and shall post copies of notices in conspicuous places available to employees and applicants for employment.

(4) The CONTRACTOR will comply with all provisions of Executive Order No. 11246, as amended, and the rules, regulations, and relevant orders of the Secretary of Labor.

(5) The CONTRACTOR will furnish all information and reports required by Executive Order No. 11246, as amended, and the rules, regulations, and orders of the Secretary of Labor, or pursuant thereto, and will permit access to his books, records, and accounts by the contracting agency and the Secretary of Labor for purposes of investigation to ascertain compliance with such rules, regulations, and orders.

(6) In the event of the CONTRACTOR'S noncompliance with the discrimination clauses of this contract, or with any of such rules, regulations, or orders, this contract may be canceled, terminated, or suspended in whole or in part and the CONTRACTOR may be declared ineligible for further Government contracts in accordance with procedures authorized in Executive Order No. 11246, as amended, and such other sanctions may be imposed and remedies invoked as provided in Executive Order No. 11246, as amended, or by rules, regulations, or order of the Secretary of Labor, or as otherwise provided by law.

(7) The CONTRACTOR will include the provisions of Paragraphs (1) through (7) in every subcontract or purchase order unless exempted by rules, regulations, or orders of the Secretary of Labor issued pursuant to Section 204 of Executive Order No. 11246, as amended, so that such provisions will be binding upon each subcontractor or vendor. The CONTRACTOR will take such action with respect to any subcontract or purchase order as the contracting agency may direct as a means of enforcing such provisions, including sanctions for noncompliance: Provided, however, that in the event the CONTRACTOR becomes involved in, or is threatened with, litigation with a subcontractor or vendor as a result of such direction by the contracting agency, the CONTRACTOR may request the United States to enter into such litigation to protect the interests

of the United States.

SC 17.09

Add the following as paragraph 17.09 in the General Conditions:

17.09 *Prevailing Wage*

The labor classification and minimum wage rates set forth herein have been predetermined by the City Council of the City of Huntsville, Texas in accordance with statutory requirements as being the prevailing classifications and rates that shall govern on all work performed by the CONTRACTOR or any SUBCONTRACTOR on the site of the project covered by these CONTRACT DOCUMENTS. In no event shall wages be paid less than those indicated in Section 00850 - Wage Determination Rates. Texas Gov't. Code Chapter 2258.

This area was intentionally left blank.

FEDERAL REGISTER
29 CFR Part 1926 Subpart P
Trench Safety
(July 1, 2005 Revision)

This page was intentionally left blank.

If it is necessary to stand at the outboard or inboard edge of the deckload where less than 24 inches of bulwark, rail, coaming, or other protection exists, all employees shall be provided with a suitable means of protection against falling from the deckload.

(d) *First-aid and lifesaving equipment.* (1) Provisions for rendering first aid and medical assistance shall be in accordance with subpart D of this part.

(2) The employer shall ensure that there is in the vicinity of each barge in use at least one U.S. Coast Guard-approved 30-inch lifering with not less than 90 feet of line attached, and at least one portable or permanent ladder which will reach the top of the apron to the surface of the water. If the above equipment is not available at the pier, the employer shall furnish it during the time that he is working the barge.

(3) Employees walking or working on the unguarded decks of barges shall be protected with U.S. Coast Guard-approved work vests or buoyant vests.

(e) *Commercial diving operations.* Commercial diving operations shall be subject to subpart T of part 1910, §§1910.401–1910.441, of this chapter.

[39 FR 22801, June 24, 1974, as amended at 42 FR 37674, July 22, 1977]

§ 1926.606 Definitions applicable to this subpart.

(a) *Apron*—The area along the waterfront edge of the pier or wharf.

(b) *Bulwark*—The side of a ship above the upper deck.

(c) *Coaming*—The raised frame, as around a hatchway in the deck, to keep out water.

(d) *Jacob's ladder*—A marine ladder of rope or chain with wooden or metal rungs.

(e) *Rail,* for the purpose of §1926.605, means a light structure serving as a guard at the outer edge of a ship's deck.

Subpart P—Excavations

AUTHORITY: Sec. 107, Contract Worker Hours and Safety Standards Act (Construction Safety Act) (40 U.S.C. 333); Secs. 4, 6, 8, Occupational Safety and Health Act of 1970 (29 U.S.C. 653, 655, 657); Secretary of Labor's Order No. 12–71 (36 FR 8754), 8–76 (41 FR 25059), or 9–83 (48 FR 35736), as applicable, and 29 CFR part 1911.

SOURCE: 54 FR 45959, Oct. 31, 1989, unless otherwise noted.

§ 1926.650 Scope, application, and definitions applicable to this subpart.

(a) *Scope and application.* This subpart applies to all open excavations made in the earth's surface. Excavations are defined to include trenches.

(b) *Definitions applicable to this subpart.*

Accepted engineering practices means those requirements which are compatible with standards of practice required by a registered professional engineer.

Aluminum Hydraulic Shoring means a pre-engineered shoring system comprised of aluminum hydraulic cylinders (crossbraces) used in conjunction with vertical rails (uprights) or horizontal rails (walers). Such system is designed, specifically to support the sidewalls of an excavation and prevent cave-ins.

Bell-bottom pier hole means a type of shaft or footing excavation, the bottom of which is made larger than the cross section above to form a belled shape.

Benching (Benching system) means a method of protecting employees from cave-ins by excavating the sides of an excavation to form one or a series of horizontal levels or steps, usually with vertical or near-vertical surfaces between levels.

Cave-in means the separation of a mass of soil or rock material from the side of an excavation, or the loss of soil from under a trench shield or support system, and its sudden movement into the excavation, either by falling or sliding, in sufficient quantity so that it could entrap, bury, or otherwise injure and immobilize a person.

Competent person means one who is capable of identifying existing and predictable hazards in the surroundings, or working conditions which are unsanitary, hazardous, or dangerous to employees, and who has authorization to take prompt corrective measures to eliminate them.

Cross braces mean the horizontal members of a shoring system installed perpendicular to the sides of the excavation, the ends of which bear against either uprights or wales.

Excavation means any man-made cut, cavity, trench, or depression in an earth surface, formed by earth removal.

Faces or *sides* means the vertical or inclined earth surfaces formed as a result of excavation work.

Failure means the breakage, displacement, or permanent deformation of a structural member or connection so as to reduce its structural integrity and its supportive capabilities.

Hazardous atmosphere means an atmosphere which by reason of being explosive, flammable, poisonous, corrosive, oxidizing, irritating, oxygen deficient, toxic, or otherwise harmful, may cause death, illness, or injury.

Kickout means the accidental release or failure of a cross brace.

Protective system means a method of protecting employees from cave-ins, from material that could fall or roll from an excavation face or into an excavation, or from the collapse of adjacent structures. Protective systems include support systems, sloping and benching systems, shield systems, and other systems that provide the necessary protection.

Ramp means an inclined walking or working surface that is used to gain access to one point from another, and is constructed from earth or from structural materials such as steel or wood.

Registered Professional Engineer means a person who is registered as a professional engineer in the state where the work is to be performed. However, a professional engineer, registered in any state is deemed to be a "registered professional engineer" within the meaning of this standard when approving designs for "manufactured protective systems" or "tabulated data" to be used in interstate commerce.

Sheeting means the members of a shoring system that retain the earth in position and in turn are supported by other members of the shoring system.

Shield (Shield system) means a structure that is able to withstand the forces imposed on it by a cave-in and thereby protect employees within the structure. Shields can be permanent structures or can be designed to be portable and moved along as work progresses. Additionally, shields can be either premanufactured or job-built in accordance with § 1926.652 (c)(3) or (c)(4). Shields used in trenches are usually referred to as "trench boxes" or "trench shields."

Shoring (Shoring system) means a structure such as a metal hydraulic, mechanical or timber shoring system that supports the sides of an excavation and which is designed to prevent cave-ins.

Sides. See "Faces."

Sloping (Sloping system) means a method of protecting employees from cave-ins by excavating to form sides of an excavation that are inclined away from the excavation so as to prevent cave-ins. The angle of incline required to prevent a cave-in varies with differences in such factors as the soil type, environmental conditions of exposure, and application of surcharge loads.

Stable rock means natural solid mineral material that can be excavated with vertical sides and will remain intact while exposed. Unstable rock is considered to be stable when the rock material on the side or sides of the excavation is secured against caving-in or movement by rock bolts or by another protective system that has been designed by a registered professional engineer.

Structural ramp means a ramp built of steel or wood, usually used for vehicle access. Ramps made of soil or rock are not considered structural ramps.

Support system means a structure such as underpinning, bracing, or shoring, which provides support to an adjacent structure, underground installation, or the sides of an excavation.

Tabulated data means tables and charts approved by a registered professional engineer and used to design and construct a protective system.

Trench (Trench excavation) means a narrow excavation (in relation to its length) made below the surface of the ground. In general, the depth is greater than the width, but the width of a trench (measured at the bottom) is not greater than 15 feet (4.6 m). If forms or other structures are installed or constructed in an excavation so as to reduce the dimension measured from the forms or structure to the side of the excavation to 15 feet (4.6 m) or less

(measured at the bottom of the excavation), the excavation is also considered to be a trench.

Trench box. See "Shield."

Trench shield. See "Shield."

Uprights means the vertical members of a trench shoring system placed in contact with the earth and usually positioned so that individual members do not contact each other. Uprights placed so that individual members are closely spaced, in contact with or interconnected to each other, are often called "sheeting."

Wales means horizontal members of a shoring system placed parallel to the excavation face whose sides bear against the vertical members of the shoring system or earth.

§ 1926.651 Specific excavation requirements.

(a) *Surface encumbrances.* All surface encumbrances that are located so as to create a hazard to employees shall be removed or supported, as necessary, to safeguard employees.

(b) *Underground installations.* (1) The estimated location of utility installations, such as sewer, telephone, fuel, electric, water lines, or any other underground installations that reasonably may be expected to be encountered during excavation work, shall be determined prior to opening an excavation.

(2) Utility companies or owners shall be contacted within established or customary local response times, advised of the proposed work, and asked to establish the location of the utility underground installations prior to the start of actual excavation. When utility companies or owners cannot respond to a request to locate underground utility installations within 24 hours (unless a longer period is required by state or local law), or cannot establish the exact location of these installations, the employer may proceed, provided the employer does so with caution, and provided detection equipment or other acceptable means to locate utility installations are used.

(3) When excavation operations approach the estimated location of underground installations, the exact location of the installations shall be determined by safe and acceptable means.

(4) While the excavation is open, underground installations shall be protected, supported or removed as necessary to safeguard employees.

(c) *Access and egress*—(1) *Structural ramps.* (i) Structural ramps that are used solely by employees as a means of access or egress from excavations shall be designed by a competent person. Structural ramps used for access or egress of equipment shall be designed by a competent person qualified in structural design, and shall be constructed in accordance with the design.

(ii) Ramps and runways constructed of two or more structural members shall have the structural members connected together to prevent displacement.

(iii) Structural members used for ramps and runways shall be of uniform thickness.

(iv) Cleats or other appropriate means used to connect runway structural members shall be attached to the bottom of the runway or shall be attached in a manner to prevent tripping.

(v) Structural ramps used in lieu of steps shall be provided with cleats or other surface treatments on the top surface to prevent slipping.

(2) *Means of egress from trench excavations.* A stairway, ladder, ramp or other safe means of egress shall be located in trench excavations that are 4 feet (1.22 m) or more in depth so as to require no more than 25 feet (7.62 m) of lateral travel for employees.

(d) *Exposure to vehicular traffic.* Employees exposed to public vehicular traffic shall be provided with, and shall wear, warning vests or other suitable garments marked with or made of reflectorized or high-visibility material.

(e) *Exposure to falling loads.* No employee shall be permitted underneath loads handled by lifting or digging equipment. Employees shall be required to stand away from any vehicle being loaded or unloaded to avoid being struck by any spillage or falling materials. Operators may remain in the cabs of vehicles being loaded or unloaded when the vehicles are equipped, in accordance with § 1926.601(b)(6), to provide adequate protection for the operator during loading and unloading operations.

(f) *Warning system for mobile equipment.* When mobile equipment is operated adjacent to an excavation, or when such equipment is required to approach the edge of an excavation, and the operator does not have a clear and direct view of the edge of the excavation, a warning system shall be utilized such as barricades, hand or mechanical signals, or stop logs. If possible, the grade should be away from the excavation.

(g) *Hazardous atmospheres*—(1) *Testing and controls.* In addition to the requirements set forth in subparts D and E of this part (29 CFR 1926.50–1926.107) to prevent exposure to harmful levels of atmospheric contaminants and to assure acceptable atmospheric conditions, the following requirements shall apply:

(i) Where oxygen deficiency (atmospheres containing less than 19.5 percent oxygen) or a hazardous atmosphere exists or could reasonably be expected to exist, such as in excavations in landfill areas or excavations in areas where hazardous substances are stored nearby, the atmospheres in the excavation shall be tested before employees enter excavations greater than 4 feet (1.22 m) in depth.

(ii) Adequate precautions shall be taken to prevent employee exposure to atmospheres containing less than 19.5 percent oxygen and other hazardous atmospheres. These precautions include providing proper respiratory protection or ventilation in accordance with subparts D and E of this part respectively.

(iii) Adequate precaution shall be taken such as providing ventilation, to prevent employee exposure to an atmosphere containing a concentration of a flammable gas in excess of 20 percent of the lower flammable limit of the gas.

(iv) When controls are used that are intended to reduce the level of atmospheric contaminants to acceptable levels, testing shall be conducted as often as necessary to ensure that the atmosphere remains safe.

(2) *Emergency rescue equipment.* (i) Emergency rescue equipment, such as breathing apparatus, a safety harness and line, or a basket stretcher, shall be readily available where hazardous atmospheric conditions exist or may reasonably be expected to develop during work in an excavation. This equipment shall be attended when in use.

(ii) Employees entering bell-bottom pier holes, or other similar deep and confined footing excavations, shall wear a harness with a life-line securely attached to it. The lifeline shall be separate from any line used to handle materials, and shall be individually attended at all times while the employee wearing the lifeline is in the excavation.

(h) *Protection from hazards associated with water accumulation.* (1) Employees shall not work in excavations in which there is accumulated water, or in excavations in which water is accumulating, unless adequate precautions have been taken to protect employees against the hazards posed by water accumulation. The precautions necessary to protect employees adequately vary with each situation, but could include special support or shield systems to protect from cave-ins, water removal to control the level of accumulating water, or use of a safety harness and lifeline.

(2) If water is controlled or prevented from accumulating by the use of water removal equipment, the water removal equipment and operations shall be monitored by a competent person to ensure proper operation.

(3) If excavation work interrupts the natural drainage of surface water (such as streams), diversion ditches, dikes, or other suitable means shall be used to prevent surface water from entering the excavation and to provide adequate drainage of the area adjacent to the excavation. Excavations subject to runoff from heavy rains will require an inspection by a competent person and compliance with paragraphs (h)(1) and (h)(2) of this section.

(i) *Stability of adjacent structures.* (1) Where the stability of adjoining buildings, walls, or other structures is endangered by excavation operations, support systems such as shoring, bracing, or underpinning shall be provided to ensure the stability of such structures for the protection of employees.

(2) Excavation below the level of the base or footing of any foundation or retaining wall that could be reasonably

expected to pose a hazard to employees shall not be permitted except when:

(i) A support system, such as underpinning, is provided to ensure the safety of employees and the stability of the structure; or

(ii) The excavation is in stable rock; or

(iii) A registered professional engineer has approved the determination that the structure is sufficently removed from the excavation so as to be unaffected by the excavation activity; or

(iv) A registered professional engineer has approved the determination that such excavation work will not pose a hazard to employees.

(3) Sidewalks, pavements, and appurtenant structure shall not be undermined unless a support system or another method of protection is provided to protect employees from the possible collapse of such structures.

(j) *Protection of employees from loose rock or soil.* (1) Adequate protection shall be provided to protect employees from loose rock or soil that could pose a hazard by falling or rolling from an excavation face. Such protection shall consist of scaling to remove loose material; installation of protective barricades at intervals as necessary on the face to stop and contain falling material; or other means that provide equivalent protection.

(2) Employees shall be protected from excavated or other materials or equipment that could pose a hazard by falling or rolling into excavations. Protection shall be provided by placing and keeping such materials or equipment at least 2 feet (.61 m) from the edge of excavations, or by the use of retaining devices that are sufficient to prevent materials or equipment from falling or rolling into excavations, or by a combination of both if necessary.

(k) *Inspections.* (1) Daily inspections of excavations, the adjacent areas, and protective systems shall be made by a competent person for evidence of a situation that could result in possible cave-ins, indications of failure of protective systems, hazardous atmospheres, or other hazardous conditions. An inspection shall be conducted by the competent person prior to the start of work and as needed throughout the shift. Inspections shall also be made after every rainstorm or other hazard increasing occurrence. These inspections are only required when employee exposure can be reasonably anticipated.

(2) Where the competent person finds evidence of a situation that could result in a possible cave-in, indications of failure of protective systems, hazardous atmospheres, or other hazardous conditions, exposed employees shall be removed from the hazardous area until the necessary precautions have been taken to ensure their safety.

(l) Walkways shall be provided where employees or equipment are required or permitted to cross over excavations. Guardrails which comply with § 1926.502(b) shall be provided where walkways are 6 feet (1.8 m) or more above lower levels.

[54 FR 45959, Oct. 31, 1989, as amended by 59 FR 40730, Aug. 9, 1994]

§ 1926.652 Requirements for protective systems.

(a) *Protection of employees in excavations.* (1) Each employee in an excavation shall be protected from cave-ins by an adequate protective system designed in accordance with paragraph (b) or (c) of this section except when:

(i) Excavations are made entirely in stable rock; or

(ii) Excavations are less than 5 feet (1.52m) in depth and examination of the ground by a competent person provides no indication of a potential cave-in.

(2) Protective systems shall have the capacity to resist without failure all loads that are intended or could reasonably be expected to be applied or transmitted to the system.

(b) *Design of sloping and benching systems.* The slopes and configurations of sloping and benching systems shall be selected and constructed by the employer or his designee and shall be in accordance with the requirements of paragraph (b)(1); or, in the alternative, paragraph (b)(2); or, in the alternative, paragraph (b)(3), or, in the alternative, paragraph (b)(4), as follows:

(1) *Option (1)—Allowable configurations and slopes.* (i) Excavations shall be sloped at an angle not steeper than one and one-half horizontal to one vertical

(34 degrees measured from the horizontal), unless the employer uses one of the other options listed below.

(ii) Slopes specified in paragraph (b)(1)(i) of this section, shall be excavated to form configurations that are in accordance with the slopes shown for Type C soil in Appendix B to this subpart.

(2) *Option (2)—Determination of slopes and configurations using Appendices A and B.* Maximum allowable slopes, and allowable configurations for sloping and benching systems, shall be determined in accordance with the conditions and requirements set forth in appendices A and B to this subpart.

(3) *Option (3)—Designs using other tabulated data.* (i) Designs of sloping or benching systems shall be selected from and be in accordance with tabulated data, such as tables and charts.

(ii) The tabulated data shall be in written form and shall include all of the following:

(A) Identification of the parameters that affect the selection of a sloping or benching system drawn from such data;

(B) Identification of the limits of use of the data, to include the magnitude and configuration of slopes determined to be safe;

(C) Explanatory information as may be necessary to aid the user in making a correct selection of a protective system from the data.

(iii) At least one copy of the tabulated data which identifies the registered professional engineer who approved the data, shall be maintained at the jobsite during construction of the protective system. After that time the data may be stored off the jobsite, but a copy of the data shall be made available to the Secretary upon request.

(4) *Option (4)—Design by a registered professional engineer.* (i) Sloping and benching systems not utilizing Option (1) or Option (2) or Option (3) under paragraph (b) of this section shall be approved by a registered professional engineer.

(ii) Designs shall be in written form and shall include at least the following:

(A) The magnitude of the slopes that were determined to be safe for the particular project;

(B) The configurations that were determined to be safe for the particular project; and

(C) The identity of the registered professional engineer approving the design.

(iii) At least one copy of the design shall be maintained at the jobsite while the slope is being constructed. After that time the design need not be at the jobsite, but a copy shall be made available to the Secretary upon request.

(c) *Design of support systems, shield systems, and other protective systems.* Designs of support systems shield systems, and other protective systems shall be selected and constructed by the employer or his designee and shall be in accordance with the requirements of paragraph (c)(1); or, in the alternative, paragraph (c)(2); or, in the alternative, paragraph (c)(3); or, in the alternative, paragraph (c)(4) as follows:

(1) *Option (1)—Designs using appendices A, C and D.* Designs for timber shoring in trenches shall be determined in accordance with the conditions and requirements set forth in appendices A and C to this subpart. Designs for aluminum hydraulic shoring shall be in accordance with paragraph (c)(2) of this section, but if manufacturer's tabulated data cannot be utilized, designs shall be in accordance with appendix D.

(2) *Option (2)—Designs Using Manufacturer's Tabulated Data.* (i) Design of support systems, shield systems, or other protective systems that are drawn from manufacturer's tabulated data shall be in accordance with all specifications, recommendations, and limitations issued or made by the manufacturer.

(ii) Deviation from the specifications, recommendations, and limitations issued or made by the manufacturer shall only be allowed after the manufacturer issues specific written approval.

(iii) Manufacturer's specifications, recommendations, and limitations, and manufacturer's approval to deviate from the specifications, recommendations, and limitations shall be in written form at the jobsite during construction of the protective system. After that time this data may be stored off the jobsite, but a copy shall

be made available to the Secretary upon request.

(3) *Option (3)—Designs using other tabulated data.* (i) Designs of support systems, shield systems, or other protective systems shall be selected from and be in accordance with tabulated data, such as tables and charts.

(ii) The tabulated data shall be in written form and include all of the following:

(A) Identification of the parameters that affect the selection of a protective system drawn from such data;

(B) Identification of the limits of use of the data;

(C) Explanatory information as may be necessary to aid the user in making a correct selection of a protective system from the data.

(iii) At least one copy of the tabulated data, which identifies the registered professional engineer who approved the data, shall be maintained at the jobsite during construction of the protective system. After that time the data may be stored off the jobsite, but a copy of the data shall be made available to the Secretary upon request.

(4) *Option (4)—Design by a registered professional engineer.* (i) Support systems, shield systems, and other protective systems not utilizing Option 1, Option 2 or Option 3, above, shall be approved by a registered professional engineer.

(ii) Designs shall be in written form and shall include the following:

(A) A plan indicating the sizes, types, and configurations of the materials to be used in the protective system; and

(B) The identity of the registered professional engineer approving the design.

(iii) At least one copy of the design shall be maintained at the jobsite during construction of the protective system. After that time, the design may be stored off the jobsite, but a copy of the design shall be made available to the Secretary upon request.

(d) *Materials and equipment.* (1) Materials and equipment used for protective systems shall be free from damage or defects that might impair their proper function.

(2) Manufactured materials and equipment used for protective systems shall be used and maintained in a manner that is consistent with the recommendations of the manufacturer, and in a manner that will prevent employee exposure to hazards.

(3) When material or equipment that is used for protective systems is damaged, a competent person shall examine the material or equipment and evaluate its suitability for continued use. If the competent person cannot assure the material or equipment is able to support the intended loads or is otherwise suitable for safe use, then such material or equipment shall be removed from service, and shall be evaluated and approved by a registered professional engineer before being returned to service.

(e) *Installation and removal of support*—(1) *General.* (i) Members of support systems shall be securely connected together to prevent sliding, falling, kickouts, or other predictable failure.

(ii) Support systems shall be installed and removed in a manner that protects employees from cave-ins, structural collapses, or from being struck by members of the support system.

(iii) Individual members of support systems shall not be subjected to loads exceeding those which those members were designed to withstand.

(iv) Before temporary removal of individual members begins, additional precautions shall be taken to ensure the safety of employees, such as installing other structural members to carry the loads imposed on the support system.

(v) Removal shall begin at, and progress from, the bottom of the excavation. Members shall be released slowly so as to note any indication of possible failure of the remaining members of the structure or possible cave-in of the sides of the excavation.

(vi) Backfilling shall progress together with the removal of support systems from excavations.

(2) *Additional requirements for support systems for trench excavations.* (i) Excavation of material to a level no greater than 2 feet (.61 m) below the bottom of the members of a support system shall be permitted, but only if the system is designed to resist the forces calculated for the full depth of the trench, and

there are no indications while the trench is open of a possible loss of soil from behind or below the bottom of the support system.

(ii) Installation of a support system shall be closely coordinated with the excavation of trenches.

(f) *Sloping and benching systems.* Employees shall not be permitted to work on the faces of sloped or benched excavations at levels above other employees except when employees at the lower levels are adequately protected from the hazard of falling, rolling, or sliding material or equipment.

(g) *Shield systems*—(1) *General.* (i) Shield systems shall not be subjected to loads exceeding those which the system was designed to withstand.

(ii) Shields shall be installed in a manner to restrict lateral or other hazardous movement of the shield in the event of the application of sudden lateral loads.

(iii) Employees shall be protected from the hazard of cave-ins when entering or exiting the areas protected by shields.

(iv) Employees shall not be allowed in shields when shields are being installed, removed, or moved vertically.

(2) *Additional requirement for shield systems used in trench excavations.* Excavations of earth material to a level not greater than 2 feet (.61 m) below the bottom of a shield shall be permitted, but only if the shield is designed to resist the forces calculated for the full depth of the trench, and there are no indications while the trench is open of a possible loss of soil from behind or below the bottom of the shield.

APPENDIX A TO SUBPART P OF PART 1926—SOIL CLASSIFICATION

(a) *Scope and application*—(1) *Scope.* This appendix describes a method of classifying soil and rock deposits based on site and environmental conditions, and on the structure and composition of the earth deposits. The appendix contains definitions, sets forth requirements, and describes acceptable visual and manual tests for use in classifying soils.

(2) *Application.* This appendix applies when a sloping or benching system is designed in accordance with the requirements set forth in §1926.652(b)(2) as a method of protection for employees from cave-ins. This appendix also applies when timber shoring for excavations is designed as a method of protection from cave-ins in accordance with appendix C to subpart P of part 1926, and when aluminum hydraulic shoring is designed in accordance with appendix D. This Appendix also applies if other protective systems are designed and selected for use from data prepared in accordance with the requirements set forth in §1926.652(c), and the use of the data is predicated on the use of the soil classification system set forth in this appendix.

(b) *Definitions.* The definitions and examples given below are based on, in whole or in part, the following: American Society for Testing Materials (ASTM) Standards D653-85 and D2488; The Unified Soils Classification System, The U.S. Department of Agriculture (USDA) Textural Classification Scheme; and The National Bureau of Standards Report BSS-121.

Cemented soil means a soil in which the particles are held together by a chemical agent, such as calcium carbonate, such that a hand-size sample cannot be crushed into powder or individual soil particles by finger pressure.

Cohesive soil means clay (fine grained soil), or soil with a high clay content, which has cohesive strength. Cohesive soil does not crumble, can be excavated with vertical sideslopes, and is plastic when moist. Cohesive soil is hard to break up when dry, and exhibits significant cohesion when submerged. Cohesive soils include clayey silt, sandy clay, silty clay, clay and organic clay.

Dry soil means soil that does not exhibit visible signs of moisture content.

Fissured means a soil material that has a tendency to break along definite planes of fracture with little resistance, or a material that exhibits open cracks, such as tension cracks, in an exposed surface.

Granular soil means gravel, sand, or silt, (coarse grained soil) with little or no clay content. Granular soil has no cohesive strength. Some moist granular soils exhibit apparent cohesion. Granular soil cannot be molded when moist and crumbles easily when dry.

Layered system means two or more distinctly different soil or rock types arranged in layers. Micaceous seams or weakened planes in rock or shale are considered layered.

Moist soil means a condition in which a soil looks and feels damp. Moist cohesive soil can easily be shaped into a ball and rolled into small diameter threads before crumbling. Moist granular soil that contains some cohesive material will exhibit signs of cohesion between particles.

Plastic means a property of a soil which allows the soil to be deformed or molded without cracking, or appreciable volume change.

Saturated soil means a soil in which the voids are filled with water. Saturation does not require flow. Saturation, or near saturation, is necessary for the proper use of instruments such as a pocket penetrometer or sheer vane.

Soil classification system means, for the purpose of this subpart, a method of categorizing soil and rock deposits in a hierarchy of Stable Rock, Type A, Type B, and Type C, in decreasing order of stability. The categories are determined based on an analysis of the properties and performance characteristics of the deposits and the environmental conditions of exposure.

Stable rock means natural solid mineral matter that can be excavated with vertical sides and remain intact while exposed.

Submerged soil means soil which is underwater or is free seeping.

Type A means cohesive soils with an unconfined compressive strength of 1.5 ton per square foot (tsf) (144 kPa) or greater. Examples of cohesive soils are: clay, silty clay, sandy clay, clay loam and, in some cases, silty clay loam and sandy clay loam. Cemented soils such as caliche and hardpan are also considered Type A. However, no soil is Type A if:

(i) The soil is fissured; or

(ii) The soil is subject to vibration from heavy traffic, pile driving, or similar effects; or

(iii) The soil has been previously disturbed; or

(iv) The soil is part of a sloped, layered system where the layers dip into the excavation on a slope of four horizontal to one vertical (4H:1V) or greater; or

(v) The material is subject to other factors that would require it to be classified as a less stable material.

Type B means:

(i) Cohesive soil with an unconfined compressive strength greater than 0.5 tsf (48 kPa) but less than 1.5 tsf (144 kPa); or

(ii) Granular cohesionless soils including: angular gravel (similar to crushed rock), silt, silt loam, sandy loam and, in some cases, silty clay loam and sandy clay loam.

(iii) Previously disturbed soils except those which would otherwise be classed as Type C soil.

(iv) Soil that meets the unconfined compressive strength or cementation requirements for Type A, but is fissured or subject to vibration; or

(v) Dry rock that is not stable; or

(vi) Material that is part of a sloped, layered system where the layers dip into the excavation on a slope less steep than four horizontal to one vertical (4H:1V), but only if the material would otherwise be classified as Type B.

Type C means:

(i) Cohesive soil with an unconfined compressive strength of 0.5 tsf (48 kPa) or less; or

(ii) Granular soils including gravel, sand, and loamy sand; or

(iii) Submerged soil or soil from which water is freely seeping; or

(iv) Submerged rock that is not stable, or

(v) Material in a sloped, layered system where the layers dip into the excavation or a slope of four horizontal to one vertical (4H:1V) or steeper.

Unconfined compressive strength means the load per unit area at which a soil will fail in compression. It can be determined by laboratory testing, or estimated in the field using a pocket penetrometer, by thumb penetration tests, and other methods.

Wet soil means soil that contains significantly more moisture than moist soil, but in such a range of values that cohesive material will slump or begin to flow when vibrated. Granular material that would exhibit cohesive properties when moist will lose those cohesive properties when wet.

(c) *Requirements*—(1) *Classification of soil and rock deposits.* Each soil and rock deposit shall be classified by a competent person as Stable Rock, Type A, Type B, or Type C in accordance with the definitions set forth in paragraph (b) of this appendix.

(2) *Basis of classification.* The classification of the deposits shall be made based on the results of at least one visual and at least one manual analysis. Such analyses shall be conducted by a competent person using tests described in paragraph (d) below, or in other recognized methods of soil classification and testing such as those adopted by the America Society for Testing Materials, or the U.S. Department of Agriculture textural classification system.

(3) *Visual and manual analyses.* The visual and manual analyses, such as those noted as being acceptable in paragraph (d) of this appendix, shall be designed and conducted to provide sufficient quantitative and qualitative information as may be necessary to identify properly the properties, factors, and conditions affecting the classification of the deposits.

(4) *Layered systems.* In a layered system, the system shall be classified in accordance with its weakest layer. However, each layer may be classified individually where a more stable layer lies under a less stable layer.

(5) *Reclassification.* If, after classifying a deposit, the properties, factors, or conditions affecting its classification change in any way, the changes shall be evaluated by a competent person. The deposit shall be reclassified as necessary to reflect the changed circumstances.

(d) *Acceptable visual and manual tests.*—(1) *Visual tests.* Visual analysis is conducted to determine qualitative information regarding the excavation site in general, the soil adjacent to the excavation, the soil forming the sides of the open excavation, and the soil taken as samples from excavated material.

(i) Observe samples of soil that are excavated and soil in the sides of the excavation. Estimate the range of particle sizes and the relative amounts of the particle sizes. Soil that is primarily composed of fine-grained

material is cohesive material. Soil composed primarily of coarse-grained sand or gravel is granular material.

(ii) Observe soil as it is excavated. Soil that remains in clumps when excavated is cohesive. Soil that breaks up easily and does not stay in clumps is granular.

(iii) Observe the side of the opened excavation and the surface area adjacent to the excavation. Crack-like openings such as tension cracks could indicate fissured material. If chunks of soil spall off a vertical side, the soil could be fissured. Small spalls are evidence of moving ground and are indications of potentially hazardous situations.

(iv) Observe the area adjacent to the excavation and the excavation itself for evidence of existing utility and other underground structures, and to identify previously disturbed soil.

(v) Observe the opened side of the excavation to identify layered systems. Examine layered systems to identify if the layers slope toward the excavation. Estimate the degree of slope of the layers.

(vi) Observe the area adjacent to the excavation and the sides of the opened excavation for evidence of surface water, water seeping from the sides of the excavation, or the location of the level of the water table.

(vii) Observe the area adjacent to the excavation and the area within the excavation for sources of vibration that may affect the stability of the excavation face.

(2) *Manual tests.* Manual analysis of soil samples is conducted to determine quantitative as well as qualitative properties of soil and to provide more information in order to classify soil properly.

(i) *Plasticity.* Mold a moist or wet sample of soil into a ball and attempt to roll it into threads as thin as ⅛-inch in diameter. Cohesive material can be successfully rolled into threads without crumbling. For example, if at least a two inch (50 mm) length of ⅛-inch thread can be held on one end without tearing, the soil is cohesive.

(ii) *Dry strength.* If the soil is dry and crumbles on its own or with moderate pressure into individual grains or fine powder, it is granular (any combination of gravel, sand, or silt). If the soil is dry and falls into clumps which break up into smaller clumps, but the smaller clumps can only be broken up with difficulty, it may be clay in any combination with gravel, sand or silt. If the dry soil breaks into clumps which do not break up into small clumps and which can only be broken with difficulty, and there is no visual indication the soil is fissured, the soil may be considered unfissured.

(iii) *Thumb penetration.* The thumb penetration test can be used to estimate the unconfined compressive strength of cohesive soils. (This test is based on the thumb penetration test described in American Society for Testing and Materials (ASTM) Standard designation D2488—"Standard Recommended Practice for Description of Soils (Visual—Manual Procedure).") Type A soils with an unconfined compressive strength of 1.5 tsf can be readily indented by the thumb; however, they can be penetrated by the thumb only with very great effort. Type C soils with an unconfined compressive strength of 0.5 tsf can be easily penetrated several inches by the thumb, and can be molded by light finger pressure. This test should be conducted on an undisturbed soil sample, such as a large clump of spoil, as soon as practicable after excavation to keep to a miminum the effects of exposure to drying influences. If the excavation is later exposed to wetting influences (rain, flooding), the classification of the soil must be changed accordingly.

(iv) *Other strength tests.* Estimates of unconfined compressive strength of soils can also be obtained by use of a pocket penetrometer or by using a hand-operated shearvane.

(v) *Drying test.* The basic purpose of the drying test is to differentiate between cohesive material with fissures, unfissured cohesive material, and granular material. The procedure for the drying test involves drying a sample of soil that is approximately one inch thick (2.54 cm) and six inches (15.24 cm) in diameter until it is thoroughly dry:

(A) If the sample develops cracks as it dries, significant fissures are indicated.

(B) Samples that dry without cracking are to be broken by hand. If considerable force is necessary to break a sample, the soil has significant cohesive material content. The soil can be classified as a unfissured cohesive material and the unconfined compressive strength should be determined.

(C) If a sample breaks easily by hand, it is either a fissured cohesive material or a granular material. To distinguish between the two, pulverize the dried clumps of the sample by hand or by stepping on them. If the clumps do not pulverize easily, the material is cohesive with fissures. If they pulverize easily into very small fragments, the material is granular.

APPENDIX B TO SUBPART P OF PART 1926—SLOPING AND BENCHING

(a) *Scope and application.* This appendix contains specifications for sloping and benching when used as methods of protecting employees working in excavations from cave-ins. The requirements of this appendix apply when the design of sloping and benching protective systems is to be performed in accordance with the requirements set forth in §1926.652(b)(2).

(b) *Definitions.*

Actual slope means the slope to which an excavation face is excavated.

Distress means that the soil is in a condition where a cave-in is imminent or is likely

to occur. Distress is evidenced by such phenomena as the development of fissures in the face of or adjacent to an open excavation; the subsidence of the edge of an excavation; the slumping of material from the face or the bulging or heaving of material from the bottom of an excavation; the spalling of material from the face of an excavation; and ravelling, i.e., small amounts of material such as pebbles or little clumps of material suddenly separating from the face of an excavation and trickling or rolling down into the excavation.

Maximum allowable slope means the steepest incline of an excavation face that is acceptable for the most favorable site conditions as protection against cave-ins, and is expressed as the ratio of horizontal distance to vertical rise (H:V).

Short term exposure means a period of time less than or equal to 24 hours that an excavation is open.

(c) *Requirements*—(1) *Soil classification.* Soil and rock deposits shall be classified in accordance with appendix A to subpart P of part 1926.

(2) *Maximum allowable slope.* The maximum allowable slope for a soil or rock deposit shall be determined from Table B-1 of this appendix.

(3) *Actual slope.* (i) The actual slope shall not be steeper than the maximum allowable slope.

(ii) The actual slope shall be less steep than the maximum allowable slope, when there are signs of distress. If that situation occurs, the slope shall be cut back to an actual slope which is at least ½ horizontal to one vertical (½H:1V) less steep than the maximum allowable slope.

(iii) When surcharge loads from stored material or equipment, operating equipment, or traffic are present, a competent person shall determine the degree to which the actual slope must be reduced below the maximum allowable slope, and shall assure that such reduction is achieved. Surcharge loads from adjacent structures shall be evaluated in accordance with § 1926.651(i).

(4) *Configurations.* Configurations of sloping and benching systems shall be in accordance with Figure B-1.

TABLE B-1

MAXIMUM ALLOWABLE SLOPES

SOIL OR ROCK TYPE	MAXIMUM ALLOWABLE SLOPES (H:V) [1] FOR EXCAVATIONS LESS THAN 20 FEET DEEP [3]
STABLE ROCK TYPE A [2] TYPE B TYPE C	VERTICAL (90°) 3/4 : 1 (53°) 1:1 (45°) 1½: 1 (34°)

NOTES:

1. Numbers shown in parentheses next to maximum allowable slopes are angles expressed in degrees from the horizontal. Angles have been rounded off.
2. A short-term maximum allowable slope of 1/2H:1V (63°) is allowed in excavations in Type A soil that are 12 feet (3.67 m) or less in depth. Short-term maximum allowable slopes for excavations greater than 12 feet (3.67 m) in depth shall be 3/4H:1V (53°).
3. Sloping or benching for excavations greater than 20 feet deep shall be designed by a registered professional engineer.

Figure B–1

Slope Configurations

(All slopes stated below are in the horizontal to vertical ratio)

B–1.1 Excavations made in Type A soil.

1. All simple slope excavation 20 feet or less in depth shall have a maximum allowable slope of ¾:1.

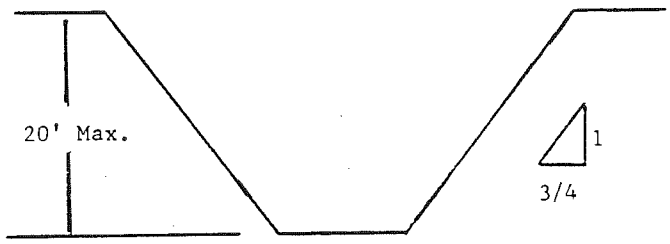

SIMPLE SLOPE—GENERAL

Exception: Simple slope excavations which are open 24 hours or less (short term) and which are 12 feet or less in depth shall have a maximum allowable slope of ½:1.

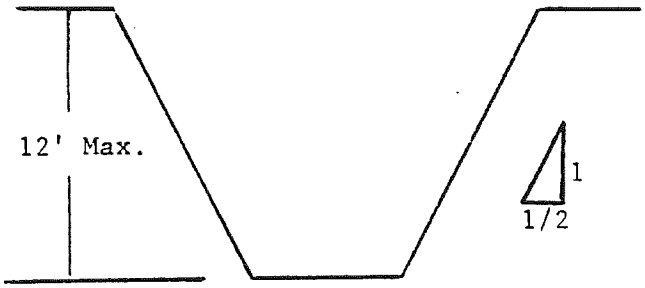

SIMPLE SLOPE—SHORT TERM

2. All benched excavations 20 feet or less in depth shall have a maximum allowable slope of ¾ to 1 and maximum bench dimensions as follows:

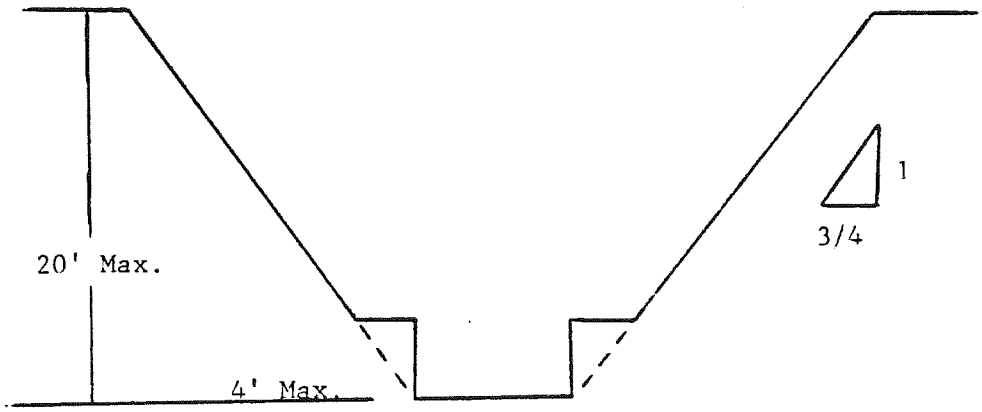

SIMPLE BENCH

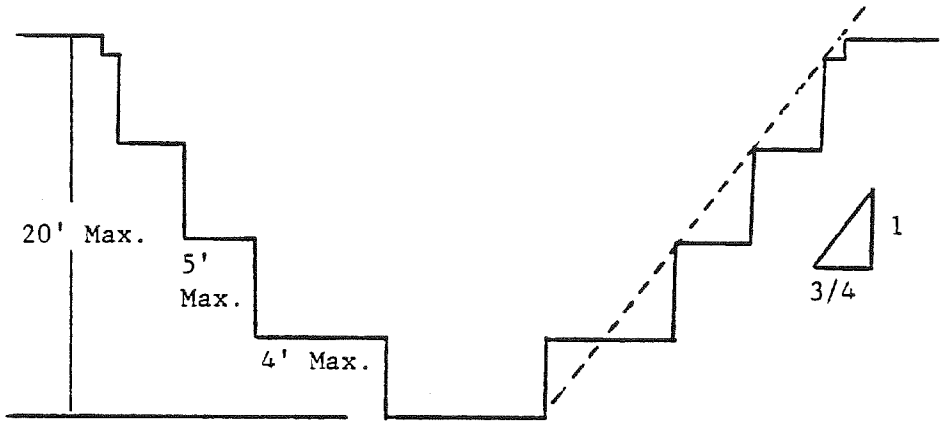

MULTIPLE BENCH

3. All excavations 8 feet or less in depth which have unsupported vertically sided lower portions shall have a maximum vertical side of 3½ feet.

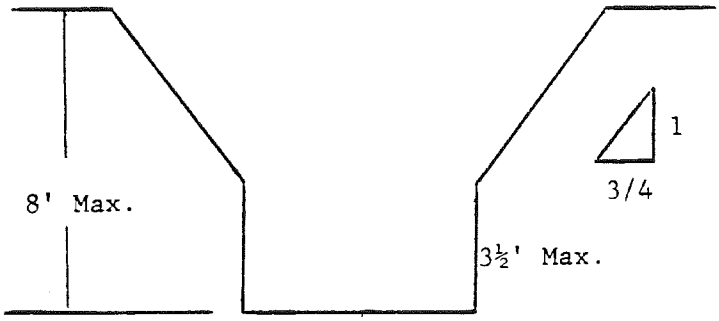

UNSUPPORTED VERTICALLY SIDED LOWER PORTION—MAXIMUM 8 FEET IN DEPTH

All excavations more than 8 feet but not more than 12 feet in depth which unsupported vertically sided lower portions shall have a maximum allowable slope of 1:1 and a maximum vertical side of 3½ feet.

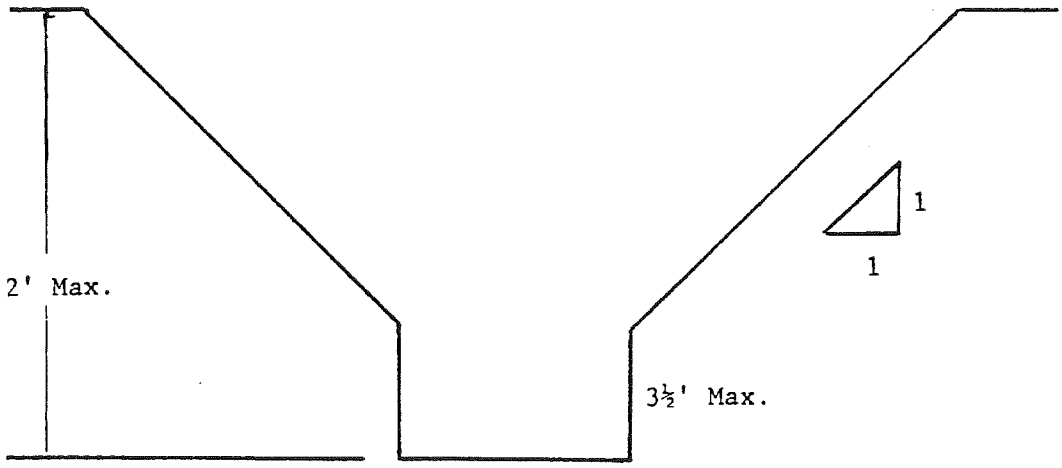

UNSUPPORTED VERTICALLY SIDED LOWER PORTION—MAXIMUM 12 FEET IN DEPTH

All excavations 20 feet or less in depth which have vertically sided lower portions that are supported or shielded shall have a maximum allowable slope of ¾:1. The support or shield system must extend at least 18 inches above the top of the vertical side.

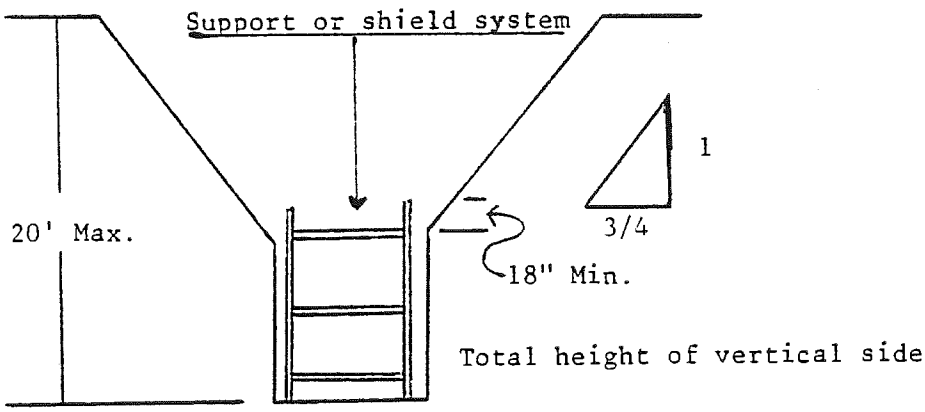

SUPPORTED OR SHIELDED VERTICALLY SIDED LOWER PORTION

4. All other simple slope, compound slope, and vertically sided lower portion excavations shall be in accordance with the other options permitted under § 1926.652(b).

B–1.2 Excavations Made in Type B Soil

1. All simple slope excavations 20 feet or less in depth shall have a maximum allowable slope of 1:1.

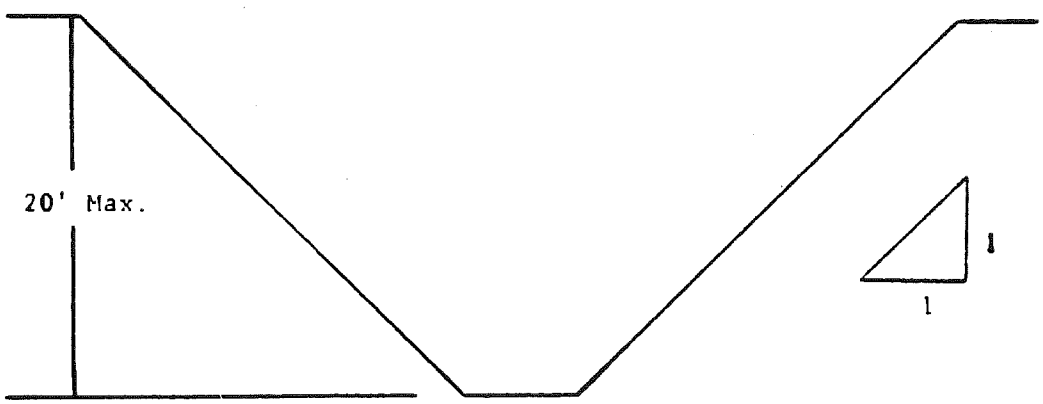

SIMPLE SLOPE

2. All benched excavations 20 feet or less in depth shall have a maximum allowable slope of 1:1 and maximum bench dimensions as follows:

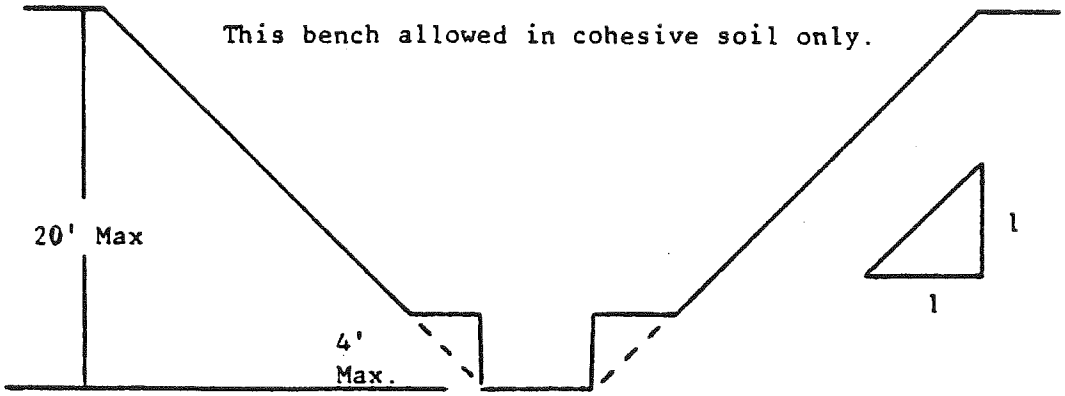

SINGLE BENCH

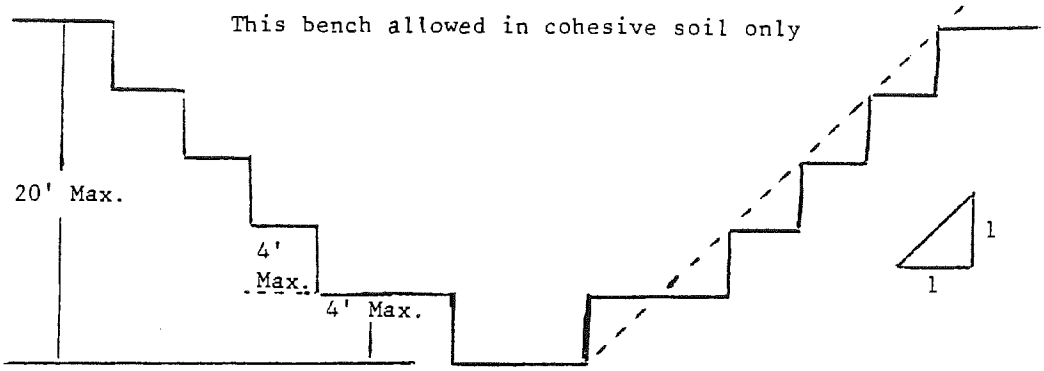

MULTIPLE BENCH

3. All excavations 20 feet or less in depth which have vertically sided lower portions shall be shielded or supported to a height at least 18 inches above the top of the vertical side. All such excavations shall have a maximum allowable slope of 1:1.

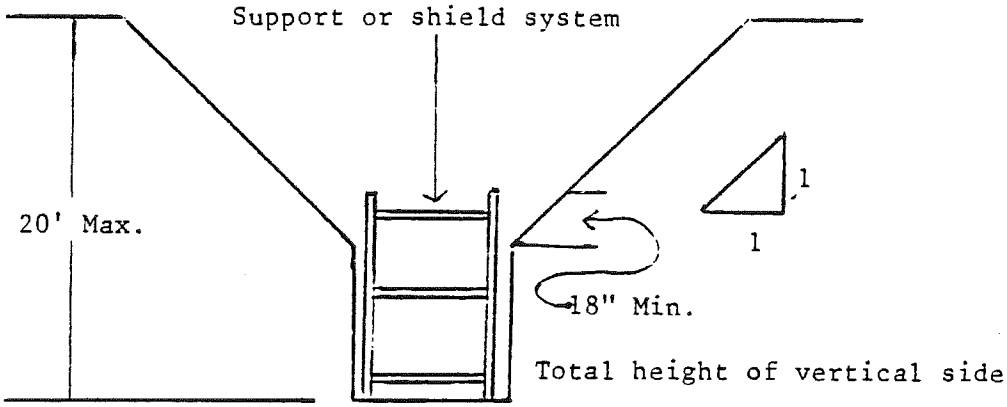

VERTICALLY SIDED LOWER PORTION

4. All other sloped excavations shall be in accordance with the other options permitted in § 1926.652(b).

B–1.3 Excavations Made in Type C Soil

1. All simple slope excavations 20 feet or less in depth shall have a maximum allowable slope of 1½:1.

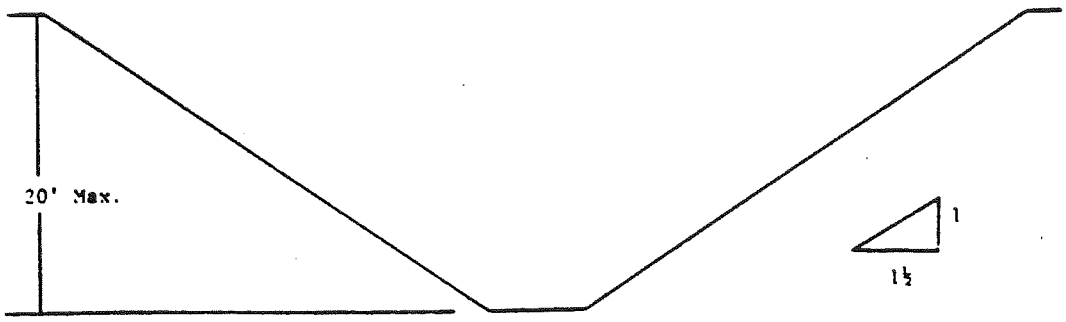

SIMPLE SLOPE

2. All excavations 20 feet or less in depth which have vertically sided lower portions shall be shielded or supported to a height at least 18 inches above the top of the vertical side. All such excavations shall have a maximum allowable slope of 1½:1.

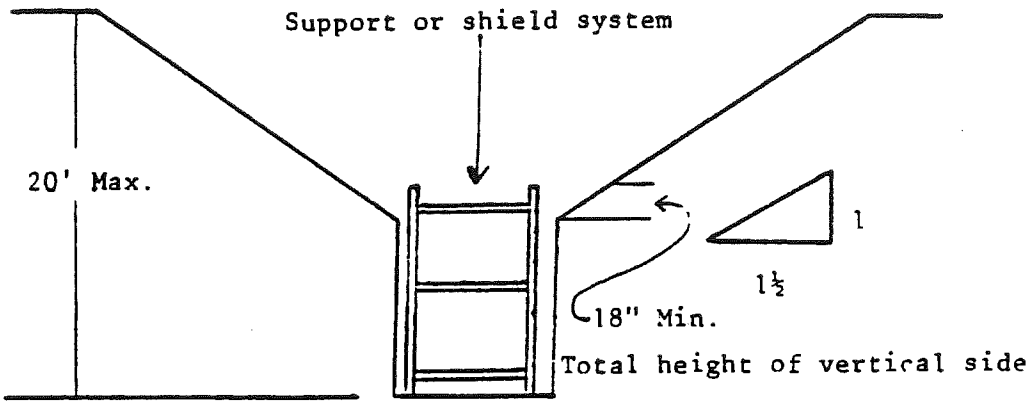

VERTICAL SIDED LOWER PORTION

3. All other sloped excavations shall be in accordance with the other options permitted in §1926.652(b).

B–1.4 Excavations Made in Layered Soils

1. All excavations 20 feet or less in depth made in layered soils shall have a maximum allowable slope for each layer as set forth below.

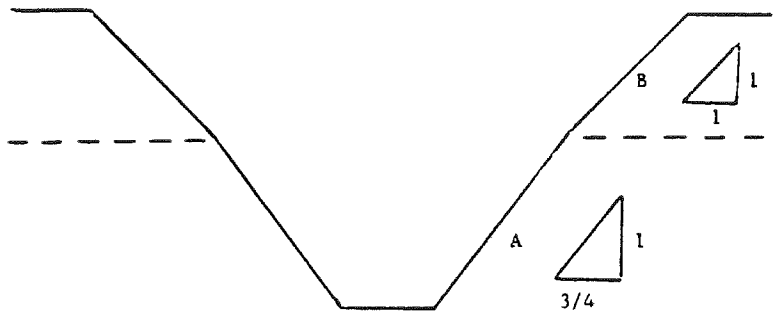

B OVER A

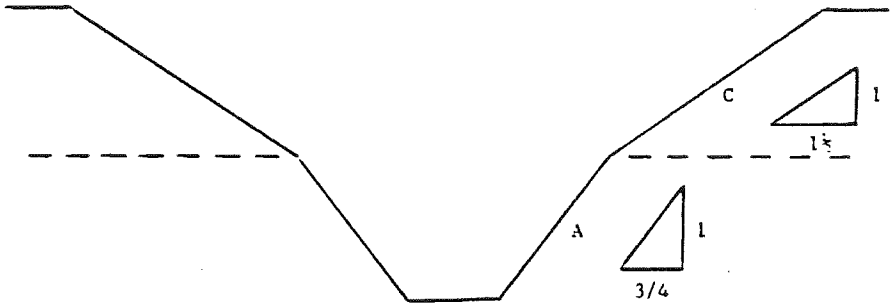

C OVER A

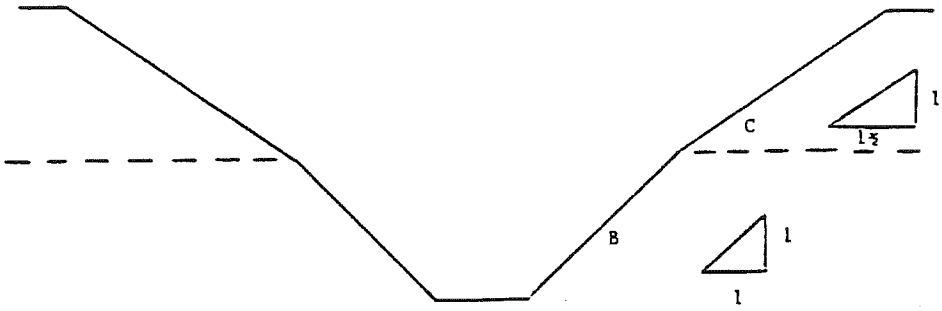

C OVER B

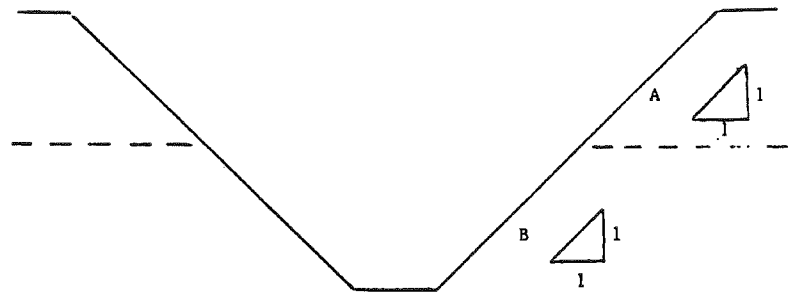

A OVER B

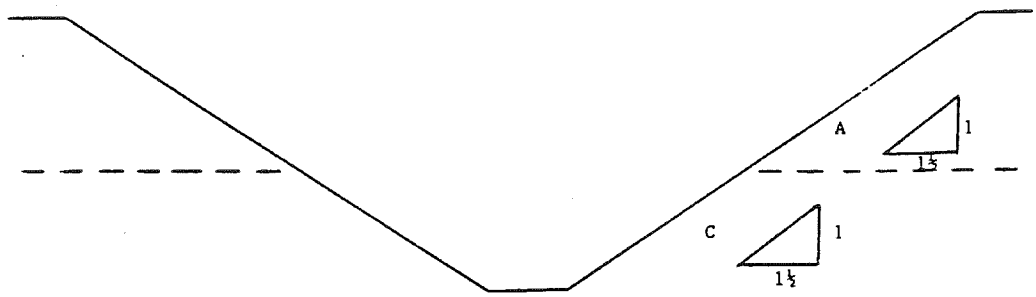

A OVER C

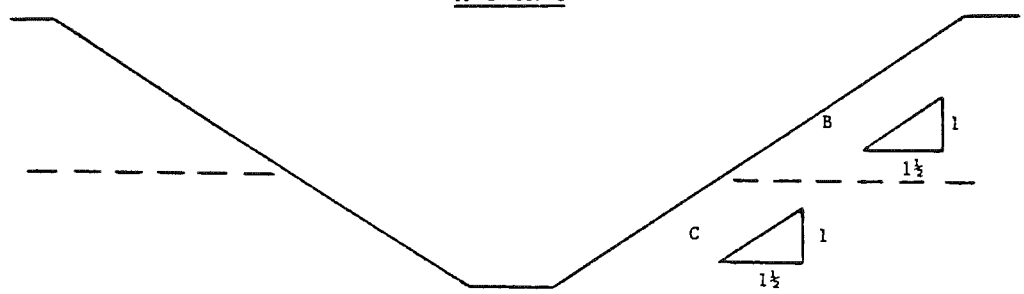

B OVER C

2. All other sloped excavations shall be in accordance with the other options permitted in §1926.652(b).

APPENDIX C TO SUBPART P OF PART 1926—TIMBER SHORING FOR TRENCHES

(a) *Scope.* This appendix contains information that can be used timber shoring is provided as a method of protection from cave-ins in trenches that do not exceed 20 feet (6.1 m) in depth. This appendix must be used when design of timber shoring protective systems is to be performed in accordance with §1926.652(c)(1). Other timber shoring configurations; other systems of support such as hydraulic and pneumatic systems; and other protective systems such as sloping, benching, shielding, and freezing systems must be designed in accordance with the requirements set forth in §1926.652(b) and §1926.652(c).

(b) *Soil Classification.* In order to use the data presented in this appendix, the soil type or types in which the excavation is made must first be determined using the soil classification method set forth in appendix A of subpart P of this part.

(c) *Presentation of Information.* Information is presented in several forms as follows:

(1) Information is presented in tabular form in Tables C–1.1, C–1.2, and C–1.3, and Tables C–2.1, C–2.2 and C–2.3 following paragraph (g) of the appendix. Each table presents the minimum sizes of timber members to use in a shoring system, and each table contains data only for the particular soil type in which the excavation or portion of

the excavation is made. The data are arranged to allow the user the flexibility to select from among several acceptable configurations of members based on varying the horizontal spacing of the crossbraces. Stable rock is exempt from shoring requirements and therefore, no data are presented for this condition.

(2) Information concerning the basis of the tabular data and the limitations of the data is presented in paragraph (d) of this appendix, and on the tables themselves.

(3) Information explaining the use of the tabular data is presented in paragraph (e) of this appendix.

(4) Information illustrating the use of the tabular data is presented in paragraph (f) of this appendix.

(5) Miscellaneous notations regarding Tables C-1.1 through C-1.3 and Tables C-2.1 through C-2.3 are presented in paragraph (g) of this Appendix.

(d) *Basis and limitations of the data.*—(1) *Dimensions of timber members.* (i) The sizes of the timber members listed in Tables C-1.1 through C-1.3 are taken from the National Bureau of Standards (NBS) report, "Recommended Technical Provisions for Construction Practice in Shoring and Sloping of Trenches and Excavations." In addition, where NBS did not recommend specific sizes of members, member sizes are based on an analysis of the sizes required for use by existing codes and on empirical practice.

(ii) The required dimensions of the members listed in Tables C-1.1 through C-1.3 refer to actual dimensions and not nominal dimensions of the timber. Employers wanting to use nominal size shoring are directed to Tables C-2.1 through C-2.3, or have this choice under § 1926.652(c)(3), and are referred to The Corps of Engineers, The Bureau of Reclamation or data from other acceptable sources.

(2) *Limitation of application.* (i) It is not intended that the timber shoring specification apply to every situation that may be experienced in the field. These data were developed to apply to the situations that are most commonly experienced in current trenching practice. Shoring systems for use in situations that are not covered by the data in this appendix must be designed as specified in § 1926.652(c).

(ii) When any of the following conditions are present, the members specified in the tables are not considered adequate. Either an alternate timber shoring system must be designed or another type of protective system designed in accordance with § 1926.652.

(A) When loads imposed by structures or by stored material adjacent to the trench weigh in excess of the load imposed by a two-foot soil surcharge. The term "adjacent" as used here means the area within a horizontal distance from the edge of the trench equal to the depth of the trench.

(B) When vertical loads imposed on cross braces exceed a 240-pound gravity load distributed on a one-foot section of the center of the crossbrace.

(C) When surcharge loads are present from equipment weighing in excess of 20,000 pounds.

(D) When only the lower portion of a trench is shored and the remaining portion of the trench is sloped or benched unless: The sloped portion is sloped at an angle less steep than three horizontal to one vertical; or the members are selected from the tables for use at a depth which is determined from the top of the overall trench, and not from the toe of the sloped portion.

(e) *Use of Tables.* The members of the shoring system that are to be selected using this information are the cross braces, the uprights, and the wales, where wales are required. Minimum sizes of members are specified for use in different types of soil. There are six tables of information, two for each soil type. The soil type must first be determined in accordance with the soil classification system described in appendix A to subpart P of part 1926. Using the appropriate table, the selection of the size and spacing of the members is then made. The selection is based on the depth and width of the trench where the members are to be installed and, in most instances, the selection is also based on the horizontal spacing of the crossbraces. Instances where a choice of horizontal spacing of crossbracing is available, the horizontal spacing of the crossbraces must be chosen by the user before the size of any member can be determined. When the soil type, the width and depth of the trench, and the horizontal spacing of the crossbraces are known, the size and vertical spacing of the crossbraces, the size and vertical spacing of the wales, and the size and horizontal spacing of the uprights can be read from the appropriate table.

(f) *Examples to Illustrate the Use of Tables C-1.1 through C-1.3.*

(1) *Example 1.*

A trench dug in Type A soil is 13 feet deep and five feet wide.

From *Table C-1.1,* for acceptable arrangements of timber can be used.

Arrangement #B1

Space 4×4 crossbraces at six feet horizontally and four feet vertically.

Wales are not required.

Space 3×8 uprights at six feet horizontally. This arrangement is commonly called "skip shoring."

Arrangement #B2

Space 4×6 crossbraces at eight feet horizontally and four feet vertically.

Space 8×8 wales at four feet vertically.

Space 2×6 uprights at four feet horizontally.

Arrangement #B3

Space 6×6 crossbraces at 10 feet horizontally and four feet vertically.

Space 8×10 wales at four feet vertically.

Space 2×6 uprights at five feet horizontally.

Arrangement #B4

Space 6×6 crossbraces at 12 feet horizontally and four feet vertically.

Space 10×10 wales at four feet vertically.

Spaces 3×8 uprights at six feet horizontally.

(2) *Example 2.*

A trench dug in Type B soil in 13 feet deep and five feet wide. From Table C–1.2 three acceptable arrangements of members are listed.

Arrangement #B1

Space 6×6 crossbraces at six feet horizontally and five feet vertically.

Space 8×8 wales at five feet vertically.

Space 2×6 uprights at two feet horizontally.

Arrangement #B2

Space 6×8 crossbraces at eight feet horizontally and five feet vertically.

Space 10×10 wales at five feet vertically.

Space 2×6 uprights at two feet horizontally.

Arrangement #B3

Space 8×8 crossbraces at 10 feet horizontally and five feet vertically.

Space 10×12 wales at five feet vertically.

Space 2×6 uprights at two feet vertically.

(3) *Example 3.*

A trench dug in Type C soil is 13 feet deep and five feet wide.

From Table C–1.3 two acceptable arrangements of members can be used.

Arrangement #B1

Space 8×8 crossbraces at six feet horizontally and five feet vertically.

Space 10×12 wales at five feet vertically.

Position 2×6 uprights as closely together as possible.

If water must be retained use special tongue and groove uprights to form tight sheeting.

Arrangement #B2

Space 8×10 crossbraces at eight feet horizontally and five feet vertically.

Space 12×12 wales at five feet vertically.

Position 2×6 uprights in a close sheeting configuration unless water pressure must be resisted. Tight sheeting must be used where water must be retained.

(4) *Example 4.*

A trench dug in Type C soil is 20 feet deep and 11 feet wide. The size and spacing of members for the section of trench that is over 15 feet in depth is determined using Table C–1.3. Only one arrangement of members is provided.

Space 8×10 crossbraces at six feet horizontally and five feet vertically.

Space 12×12 wales at five feet vertically.

Use 3×6 tight sheeting.

Use of Tables C–2.1 through C–2.3 would follow the same procedures.

(g) *Notes for all Tables.*

1. Member sizes at spacings other than indicated are to be determined as specified in § 1926.652(c), "Design of Protective Systems."

2. When conditions are saturated or submerged use Tight Sheeting. Tight Sheeting refers to the use of specially-edged timber planks (e.g., tongue and groove) at least three inches thick, steel sheet piling, or similar construction that when driven or placed in position provide a tight wall to resist the lateral pressure of water and to prevent the loss of backfill material. Close Sheeting refers to the placement of planks side-by-side allowing as little space as possible between them.

3. All spacing indicated is measured center to center.

4. Wales to be installed with greater dimension horizontal.

5. If the vertical distance from the center of the lowest crossbrace to the bottom of the trench exceeds two and one-half feet, uprights shall be firmly embedded or a mudsill shall be used. Where uprights are embedded, the vertical distance from the center of the lowest crossbrace to the bottom of the trench shall not exceed 36 inches. When mudsills are used, the vertical distance shall not exceed 42 inches. Mudsills are wales that are installed at the toe of the trench side.

6. Trench jacks may be used in lieu of or in combination with timber crossbraces.

7. Placement cf crossbraces. When the vertical spacing of crossbraces is four feet, place the top crossbrace no more than two feet below the top of the trench. When the vertical spacing of crossbraces is five feet, place the top crossbrace no more than 2.5 feet below the top of the trench.

TABLE C-1.1

TIMBER TRENCH SHORING -- MINIMUM TIMBER REQUIREMENTS *

SOIL TYPE A $P_a = 25 \times H + 72$ psf (2 ft Surcharge)

DEPTH OF TRENCH (FEET)	SIZE (ACTUAL) AND SPACING OF MEMBERS **													
	CROSS BRACES							WALES		UPRIGHTS				
	HORIZ. SPACING (FEET)	WIDTH OF TRENCH (FEET)					VERT. SPACING (FEET)	SIZE (IN)	VERT. SPACING (FEET)	MAXIMUM ALLOWABLE HORIZONTAL SPACING (FEET)				
		UP TO 4	UP TO 6	UP TO 9	UP TO 12	UP TO 15				CLOSE	4	5	6	8
5 TO 10	UP TO 6	4X4	4X4	4X6	6X6	6X6	4	Not Req'd	---				2X6	
	UP TO 8	4X4	4X4	4X6	6X6	6X6	4	Not Req'd	---					2X8
	UP TO 10	4X6	4X6	4X6	6X6	6X6	4	8X8	4			2X6		
	UP TO 12	4X6	4X6	6X6	6X6	6X6	4	8X8	4				2X6	
10 TO 15	UP TO 6	4X4	4X4	4X6	6X6	6X6	4	Not Req'd	---				3X8	
	UP TO 8	4X6	4X6	6X6	6X6	6X6	4	8X8	4		2X6			
	UP TO 10	6X6	6X5	6X6	6X8	6X8	4	8X10	4			2X6		
	UP TO 12	6X6	6X6	6X6	6X8	6X8	4	10X10	4				3X8	
15 TO 20	UP TO 6	6X6	6X6	6X6	6X8	6X8	4	6X8	4	3X6				
	UP TO 8	6X6	6X6	6X6	6X8	6X8	4	8X8	4	3X6				
	UP TO 10	8X8	8X8	8X8	8X8	8X10	4	8X10	4	3X6				
	UP TO 12	8X8	8X8	8X8	8X8	8X10	4	10X10	4	3X6				
OVER 20	SEE NOTE 1													

* Mixed oak or equivalent with a bending strength not less than 850 psi.
** Manufactured members of equivalent strength may by substituted for wood.

TABLE C-1.2

TIMBER TRENCH SHORING -- MINIMUM TIMBER REQUIREMENTS *

SOIL TYPE B $P_a = 45 \times H + 72$ psf (2 ft. Surcharge)

DEPTH OF TRENCH (FEET)	SIZE (ACTUAL) AND SPACING OF MEMBERS**													
	CROSS BRACES							WALES		UPRIGHTS				
	HORIZ. SPACING (FEET)	WIDTH OF TRENCH (FEET)					VERT. SPACING (FEET)	SIZE (IN.)	VERT. SPACING (FEET)	MAXIMUM ALLOWABLE HORIZONTAL SPACING (FEET)				
		UP TO 4	UP TO 6	UP TO 9	UP TO 12	UP TO 15				CLOSE	2	3		
5 TO 10	UP TO 6	4X6	4X6	6X6	6X6	6X6	5	6X8	5			2X6		
	UP TO 8	6X6	6X6	6X6	6X8	6X8	5	8X10	5			2X6		
	UP TO 10	6X6	6X6	6X6	6X8	6X8	5	10X10	5			2X6		
	See Note 1													
10 TO 15	UP TO 6	6X6	6X6	6X6	6X8	6X8	5	8X8	5		2X6			
	UP TO 8	6X8	6X8	6X8	8X8	8X8	5	10X10	5		2X6			
	UP TO 10	8X8	8X8	8X8	8X8	8X10	5	10X12	5		2X6			
	See Note 1													
15 TO 20	UP TO 6	6X8	6X8	6X8	8X8	8X8	5	8X10	5	3X6				
	UP TO 8	8X8	8X8	8X8	8X8	8X10	5	10X12	5	3X6				
	UP TO 10	8X10	8X10	8X10	8X10	10X10	5	12X12	5	3X6				
	See Note 1													
OVER 20	SEE NOTE 1													

* Mixed oak or equivalent with a bending strength not less than 850 psi.
** Manufactured members of equivalent strength may by substituted for wood.

TABLE C-1.3

TIMBER TRENCH SHORING -- MINIMUM TIMBER REQUIREMENTS *

SOIL TYPE C $P_a = 80 \times H + 72$ psf (2 ft. Surcharge)

DEPTH OF TRENCH (FEET)	SIZE (ACTUAL) AND SPACING OF MEMBERS**														
	CROSS BRACES									UPRIGHTS					
	HORIZ. SPACING (FEET)	WIDTH OF TRENCH (FEET)					VERT. SPACING (FEET)	SIZE (IN.)	VERT. SPACING (FEET)	MAXIMUM ALLOWABLE HORIZONTAL SPACING (FEET) (See Note 2)					
		UP TO 4	UP TO 6	UP TO 9	UP TO 12	UP TO 15				CLOSE					
5 TO 10	UP TO 6	6X8	6X8	6X8	8X8	8X8	5	8X10	5	2X6					
	UP TO 8	8X8	8X8	8X8	8X8	8X10	5	10X12	5	2X6					
	UP TO 10	8X10	8X10	8X10	8X10	10X10	5	12X12	5	2X6					
	See Note 1														
10 TO 15	UP TO 6	8X8	8X8	8X8	8X8	8X10	5	10X12	5	2X6					
	UP TO 8	8X10	8X10	8X10	8X10	10X10	5	12X12	5	2X6					
	See Note 1														
	See Note 1														
15 TO 20	UP TO 6	8X10	8X10	8X10	8X10	10X10	5	12X12	5	3X6					
	See Note 1														
	See Note 1														
	See Note 1														
OVER 20	SEE NOTE 1														

* Mixed Oak or equivalent with a bending strength not less than 850 psi.
** Manufactured members of equivalent strength may be substituted for wood.

TABLE C-2.1

TIMBER TRENCH SHORING -- MINIMUM TIMBER REQUIREMENTS *

SOIL TYPE A P_a = 25 X H ± 72 psf (2 ft. Surcharge)

DEPTH OF TRENCH (FEET)	SIZE (S4S) AND SPACING OF MEMBERS **													
	CROSS BRACES							WALES		UPRIGHTS				
	HORIZ. SPACING (FEET)	WIDTH OF TRENCH (FEET)					VERT. SPACING (FEET)	SIZE (IN.)	VERT. SPACING (FEET)	MAXIMUM ALLOWABLE HORIZONTAL SPACING (FEET)				
		UP TO 4	UP TO 6	UP TO 9	UP TO 12	UP TO 15				CLOSE	4	5	6	8
5 TO 10	UP TO 6	4X4	4X4	4X4	4X4	4X6	4	Not Req'd	Not Req'd				4X6	
	UP TO 8	4X4	4X4	4X4	4X6	4X6	4	Not Req'd	Not Req'd					4X8
	UP TO 10	4X6	4X6	4X6	6X6	6X6	4	8X8	4			4X6		
	UP TO 12	4X6	4X6	4X6	6X6	6X6	4	8X8	4				4X6	
10 TO 15	UP TO 6	4X4	4X4	4X4	6X6	6X6	4	Not Req'd	Not Req'd				4X10	
	UP TO 8	4X6	4X6	4X6	6X6	6X6	4	6X8	4		4X6			
	UP TO 10	6X6	6X6	6X6	6X6	6X6	4	8X8	4			4X8		
	UP TO 12	6X6	6X6	6X6	6X6	6X6	4	8X10	4		4X6		4X10	
15 TO 20	UP TO 6	6X6	6X6	6X6	6X6	6X6	4	6X8	4	3X6				
	UP TO 8	6X6	6X6	6X6	6X6	6X6	4	8X8	4	3X6	4X12			
	UP TO 10	6X6	6X6	6X6	6X6	6X8	4	8X10	4	3X6				
	UP TO 12	6X6	6X6	6X6	6X8	6X8	4	8X12	4	3X6	4X12			
OVER 20	SEE NOTE 1													

* Douglas fir or equivalent with a bending strength not less than 1500 psi.
** Manufactured members of equivalent strength may be substituted for wood.

TABLE C-2.2

TIMBER TRENCH SHORING -- MINIMUM TIMBER REQUIREMENTS *

SOIL TYPE B P_a = 45 X H + 72 psf (2 ft. Surcharge)

DEPTH OF TRENCH (FEET)	SIZE (S4S) AND SPACING OF MEMBERS **														
	CROSS BRACES							WALES		UPRIGHTS					
	HORIZ. SPACING (FEET)	WIDTH OF TRENCH (FEET)					VERT. SPACING (FEET)	SIZE (IN)	VERT. SPACING (FEET)	MAXIMUM ALLOWABLE HORIZONTAL SPACING (FEET)					
		UP TO 4	UP TO 6	UP TO 9	UP TO 12	UP TO 15				CLOSE	2	3	4	6	
5 TO 10	UP TO 6	4X6	4X6	4X6	6X6	6X6	5	6X8	5			3X12 4X8		4X12	
	UP TO 8	4X6	4X6	6X6	6X6	6X6	5	8X8	5		3X8		4X8		
	UP TO 10	4X6	4X6	6X6	6X6	6X8	5	8X10	5			4X8			
	See Note 1														
10 TO 15	UP TO 6	6X6	6X6	6X6	6X8	6X8	5	8X8	5	3X6	4X10				
	UP TO 8	6X8	6X8	6X8	8X8	8X8	5	10X10	5	3X6	4X10				
	UP TO 10	6X8	6X8	8X8	8X8	8X8	5	10X12	5	3X6	4X10				
	See Note 1														
15 TO 20	UP TO 6	6X8	6X8	6X8	6X8	8X8	5	8X10	5	4X6					
	UP TO 8	6X8	6X8	6X8	8X8	8X8	5	10X12	5	4X6					
	UP TO 10	8X8	8X8	8X8	8X8	8X8	5	12X12	5	4X6					
	See Note 1														
OVER 20	SEE NOTE 1														

* Douglas fir or equivalent with a bending strength not less than 1500 psi.
** Manufactured members of equivalent strength may be substituted for wood.

TABLE C-2.3

TIMBER TRENCH SHORING -- MINIMUM TIMBER REQUIREMENTS *

SOIL TYPE C P_a = 80 X H + 72 psf (2 ft. Surcharge)

DEPTH OF TRENCH (FEET)	SIZE (S4S) AND SPACING OF MEMBERS **														
	CROSS BRACES							WALES		UPRIGHTS					
	HORIZ. SPACING (FEET)	WIDTH OF TRENCH (FEET)					VERT. SPACING (FEET)	SIZE (IN.)	VERT. SPACING (FEET)	MAXIMUM ALLOWABLE HORIZONTAL SPACING (FEET)					
		UP TO 4	UP TO 6	UP TO 9	UP TO 12	UP TO 15				CLOSE					
5 TO 10	UP TO 6	6X6	6X6	6X6	6X6	8X8	5	8X8	5	3X6					
	UP TO 8	6X6	6X6	6X6	8X8	8X8	5	10X10	5	3X6					
	UP TO 10	6X6	6X6	8X8	8X8	8X8	5	10X12	5	3X6					
	See Note 1														
10 TO 15	UP TO 6	6X8	6X8	6X8	8X8	8X8	5	10X10	5	4X6					
	UP TO 8	8X8	8X8	8X8	8X8	8X8	5	12X12	5	4X6					
	See Note 1														
	See Note 1														
15 TO 20	UP TO 6	8X8	8X8	8X8	8X10	8X10	5	10X12	5	4X6					
	See Note 1														
	See Note 1														
	See Note 1														
OVER 20	SEE NOTE 1														

* Douglas fir or equivalent with a bending strength not less than 1500 psi.
** Manufactured members of equivalent strength may be substituted for wood.

APPENDIX D TO SUBPART P OF PART 1926—ALUMINUM HYDRAULIC SHORING FOR TRENCHES

(a) *Scope.* This appendix contains information that can be used when aluminum hydraulic shoring is provided as a method of protection against cave-ins in trenches that do not exceed 20 feet (6.1m) in depth. This appendix must be used when design of the aluminum hydraulic protective system cannot be performed in accordance with § 1926.652(c)(2).

(b) *Soil Classification.* In order to use data presented in this appendix, the soil type or types in which the excavation is made must

first be determined using the soil classification method set forth in appendix A of subpart P of part 1926.

(c) *Presentation of Information.* Information is presented in several forms as follows:

(1) Information is presented in tabular form in Tables D-1.1, D-1.2, D-1.3 and E-1.4. Each table presents the maximum vertical and horizontal spacings that may be used with various aluminum member sizes and various hydraulic cylinder sizes. Each table contains data only for the particular soil type in which the excavation or portion of the excavation is made. Tables D-1.1 and D-1.2 are for vertical shores in Types A and B soil. Tables D-1.3 and D1.4 are for horizontal waler systems in Types B and C soil.

(2) Information concerning the basis of the tabular data and the limitations of the data is presented in paragraph (d) of this appendix.

(3) Information explaining the use of the tabular data is presented in paragraph (e) of this appendix.

(4) Information illustrating the use of the tabular data is presented in paragraph (f) of this appendix.

(5) Miscellaneous notations (footnotes) regarding Table D-1.1 through D-1.4 are presented in paragraph (g) of this appendix.

(6) Figures, illustrating typical installations of hydraulic shoring, are included just prior to the Tables. The illustrations page is entitled "Aluminum Hydraulic Shoring; Typical Installations."

(d) *Basis and limitations of the data.*

(1) Vertical shore rails and horizontal wales are those that meet the Section Modulus requirements in the D-1 Tables. Aluminum material is 6061-T6 or material of equivalent strength and properties.

(2) Hydraulic cylinders specifications. (i) 2-inch cylinders shall be a minimum 2-inch inside diameter with a minimum safe working capacity of no less than 18,000 pounds axial compressive load at maximum extension. Maximum extension is to include full range of cylinder extensions as recommended by product manufaturer.

(ii) 3-inch cylinders shall be a minimum 3-inch inside diameter with a safe working capacity of not less than 30,000 pounds axial compressive load at extensions as recommended by product manufacturer.

(3) Limitation of application.

(i) It is not intended that the aluminum hydraulic specification apply to every situation that may be experienced in the field. These data were developed to apply to the situations that are most commonly experienced in current trenching practice. Shoring systems for use in situations that are not covered by the data in this appendix must be otherwise designed as specified in §1926.652(c).

(ii) When any of the following conditions are present, the members specified in the Tables are not considered adequate. In this case, an alternative aluminum hydraulic shoring system or other type of protective system must be designed in accordance with §1926.652.

(A) When vertical loads imposed on cross braces exceed a 100 Pound gravity load distributed on a one foot section of the center of the hydraulic cylinder.

(B) When surcharge loads are present from equipment weighing in excess of 20,000 pounds.

(C) When only the lower portion or a trench is shored and the remaining portion of the trench is sloped or benched unless: The sloped portion is sloped at an angle less steep than three horizontal to one vertical; or the members are selected from the tables for use at a depth which is determined from the top of the overall trench, and not from the toe of the sloped portion.

(e) *Use of Tables D-1.1, D-1.2, D-1.3 and D-1.4.* The members of the shoring system that are to be selected using this information are the hydraulic cylinders, and either the vertical shores or the horizontal wales. When a waler system is used the vertical timber sheeting to be used is also selected from these tables. The Tables D-1.1 and D-1.2 for vertical shores are used in Type A and B soils that do not require sheeting. Type B soils that may require sheeting, and Type C soils that always require sheeting are found in the horizontal wale Tables D-1.3 and D-1.4. The soil type must first be determined in accordance with the soil classification system described in appendix A to subpart P of part 1926. Using the appropriate table, the selection of the size and spacing of the members is made. The selection is based on the depth and width of the trench where the members are to be installed. In these tables the vertical spacing is held constant at four feet on center. The tables show the maximum horizontal spacing of cylinders allowed for each size of wale in the waler system tables, and in the vertical shore tables, the hydraulic cylinder horizontal spacing is the same as the vertical shore spacing.

(f) *Example to Illustrate the Use of the Tables:*

(1) Example 1:

A trench dug in Type A soil is 6 feet deep and 3 feet wide. From Table D-1.1: Find vertical shores and 2 inch diameter cylinders spaced 8 feet on center (o.c.) horizontally and 4 feet on center (o.c.) vertically. (See Figures 1 & 3 for typical installations.)

(2) Example 2:

A trench is dug in Type B soil that does not require sheeting, 13 feet deep and 5 feet wide. From Table D-1.2: Find vertical shores and 2 inch diameter cylinders spaced 6.5 feet o.c. horizontally and 4 feet o.c. vertically. (See Figures 1 & 3 for typical installations.)

(3) A trench is dug in Type B soil that does not require sheeting, but does experience some minor raveling of the trench face. The

trench is 16 feet deep and 9 feet wide. From Table D–1.2: Find vertical shores and 2 inch diameter cylinder (with special oversleeves as designated by footnote #B2) spaced 5.5 feet o.c. horizontally and 4 feet o.c. vertically, plywood (per footnote (g)(7) to the D–1 Table) should be used behind the shores. (See Figures 2 & 3 for typical installations.)

(4) Example 4: A trench is dug in previously disturbed Type B soil, with characteristics of a Type C soil, and will require sheeting. The trench is 18 feet deep and 12 feet wide. 8 foot horizontal spacing between cylinders is desired for working space. From Table D–1.3: Find horizontal wale with a section modulus of 14.0 spaced at 4 feet o.c. vertically and 3 inch diameter cylinder spaced at 9 feet maximum o.c. horizontally. 3×12 timber sheeting is required at close spacing vertically. (See Figure 4 for typical installation.)

(5) Example 5: A trench is dug in Type C soil, 9 feet deep and 4 feet wide. Horizontal cylinder spacing in excess of 6 feet is desired for working space. From Table D–1.4: Find horizontal wale with a section modulus of 7.0 and 2 inch diameter cylinders spaced at 6.5 feet o.c. horizontally. Or, find horizontal wale with a 14.0 section modulus and 3 inch diameter cylinder spaced at 10 feet o.c. horizontally. Both wales are spaced 4 feet o.c. vertically. 3×12 timber sheeting is required at close spacing vertically. (See Figure 4 for typical installation.)

(g) *Footnotes, and general notes, for Tables D–1.1, D–1.2, D–1.3, and D–1.4.*

(1) For applications other than those listed in the tables, refer to §1926.652(c)(2) for use of manufacturer's tabulated data. For trench depths in excess of 20 feet, refer to §1926.652(c)(2) and §1926.652(c)(3).

(2) 2 inch diameter cylinders, at this width, shall have structural steel tube (3.5×3.5×0.1875) oversleeves, or structural oversleeves of manufacturer's specification, extending the full, collapsed length.

(3) Hydraulic cylinders capacities. (i) 2 inch cylinders shall be a minimum 2-inch inside diameter with a safe working capacity of not less than 18,000 pounds axial compressive load at maximum extension. Maximum extension is to include full range of cylinder extensions as recommended by product manufacturer.

(ii) 3-inch cylinders shall be a minimum 3-inch inside diameter with a safe work capacity of not less than 30,000 pounds axial compressive load at maximum extension. Maximum extension is to include full range of cylinder extensions as recommended by product manufacturer.

(4) All spacing indicated is measured center to center.

(5) Vertical shoring rails shall have a minimum section modulus of 0.40 inch.

(6) When vertical shores are used, there must be a minimum of three shores spaced equally, horizontally, in a group.

(7) Plywood shall be 1.125 in. thick softwood or 0.75 inch. thick, 14 ply, arctic white birch (Finland form). Please note that plywood is not intended as a structural member, but only for prevention of local raveling (sloughing of the trench face) between shores.

(8) See appendix C for timber specifications.

(9) Wales are calculated for simple span conditions.

(10) See appendix D, item (d), for basis and limitations of the data.

ALUMINUM HYDRAULIC SHORING
TYPICAL INSTALLATIONS

FIGURE NO. 1
VERTICAL ALUMINUM HYDRAULIC SHORING (SPOT BRACING)

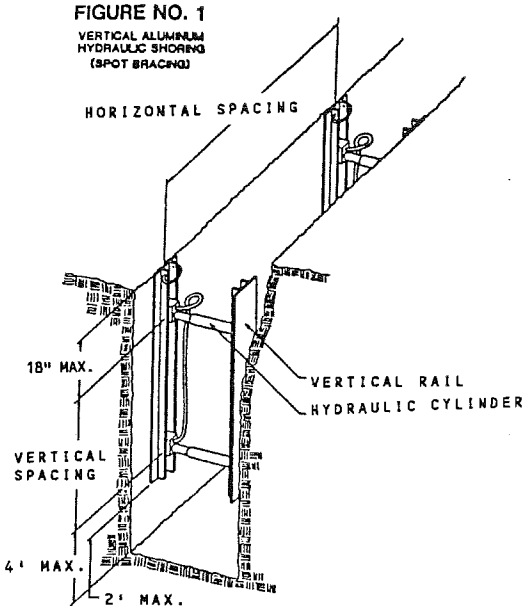

FIGURE NO. 2
VERTICAL ALUMINUM HYDRAULIC SHORING (WITH PLYWOOD)

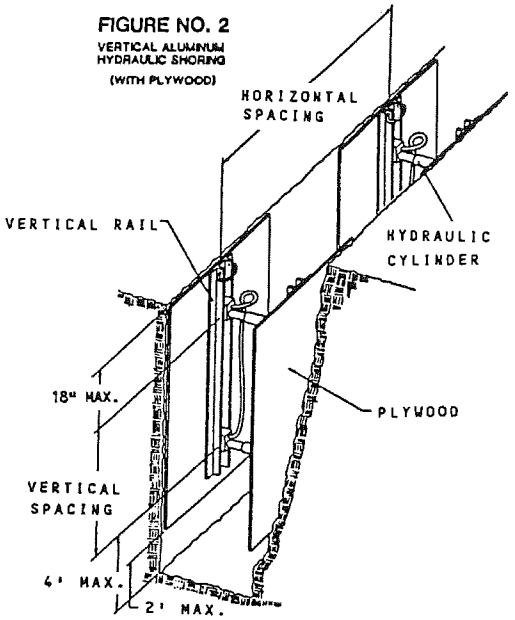

FIGURE NO. 3
VERTICAL ALUMINUM HYDRAULIC SHORING (STACKED)

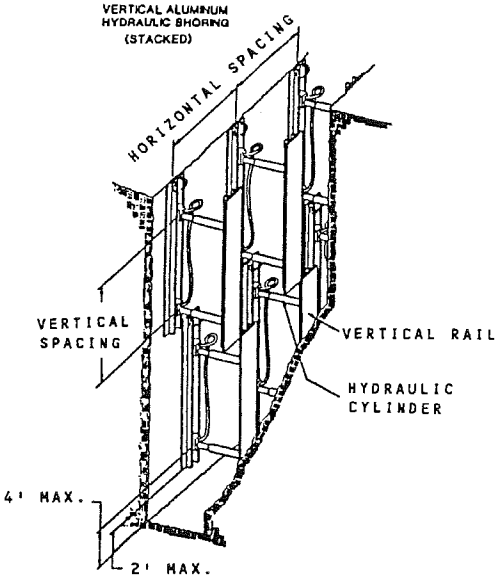

FIGURE NO. 4
ALUMINUM HYDRAULIC SHORING WALER SYSTEM (TYPICAL)

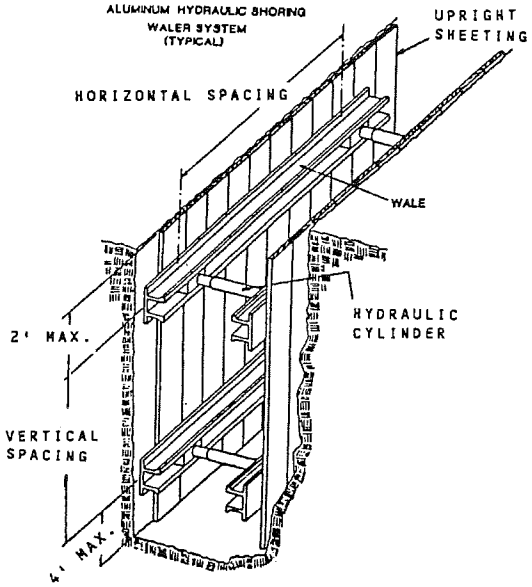

TABLE D - 1.1
ALUMINUM HYDRAULIC SHORING
VERTICAL SHORES
FOR SOIL TYPE A

DEPTH OF TRENCH (FEET)	HYDRAULIC CYLINDERS				
	MAXIMUM HORIZONTAL SPACING (FEET)	MAXIMUM VERTICAL SPACING (FEET)	WIDTH OF TRENCH (FEET)		
			UP TO 8	OVER 8 UP TO 12	OVER 12 UP TO 15
OVER 5 UP TO 10	8	4	2 INCH DIAMETER	2 INCH DIAMETER NOTE (2)	3 INCH DIAMETER
OVER 10 UP TO 15	8				
OVER 15 UP TO 20	7				
OVER 20	NOTE (1)				

Footnotes to tables, and general notes on hydraulic shoring, are found in Appendix D, Item (g)
Note (1): See Appendix D, Item (g) (1)
Note (2): See Appendix D, Item (g) (2)

TABLE D - 1.2
ALUMINUM HYDRAULIC SHORING
VERTICAL SHORES
FOR SOIL TYPE B

DEPTH OF TRENCH (FEET)	HYDRAULIC CYLINDERS				
	MAXIMUM HORIZONTAL SPACING (FEET)	MAXIMUM VERTICAL SPACING (FEET)	WIDTH OF TRENCH (FEET)		
			UP TO 8	OVER 8 UP TO 12	OVER 12 UP TO 15
OVER 5 UP TO 10	8	4	2 INCH DIAMETER	2 INCH DIAMETER NOTE (2)	3 INCH DIAMETER
OVER 10 UP TO 15	6.5				
OVER 15 UP TO 20	5.5				
OVER 20	NOTE (1)				

Footnotes to tables, and general notes on hydraulic shoring, are found in Appendix D, Item (g)
Note (1): See Appendix D, Item (g) (1)
Note (2): See Appendix D, Item (g) (2)

TABLE D - 1.3
ALUMINUM HYDRAULIC SHORING
WALER SYSTEMS
FOR SOIL TYPE B

DEPTH OF TRENCH (FEET)	WALES		HYDRAULIC CYLINDERS						TIMBER UPRIGHTS		
			WIDTH OF TRENCH (FEET)						MAX.HORIZ.SPACING (ON CENTER)		
	VERTICAL SPACING (FEET)	* SECTION MODULUS (IN^3)	UP TO 8		OVER 8 UP TO 12		OVER 12 UP TO15		SOLID SHEET	2 FT.	3 FT.
			HORIZ. SPACING	CYLINDER DIAMETER	HORIZ. SPACING	CYLINDER DIAMETER	HORIZ. SPACING	CYLINDER DIAMETER			
OVER 5 UP TO 10	4	3.5	8.0	2 IN	8.0	2 IN NOTE(2)	8.0	3 IN	—	—	3x12
		7.0	9.0	2 IN	9.0	2 IN NOTE(2)	9.0	3 IN			
		14.0	12.0	3 IN	12.0	3 IN	12.0	3 IN			
OVER 10 UP TO 15	4	3.5	6.0	2 IN	6.0	2 IN NOTE(2)	6.0	3 IN	—	3x12	—
		7.0	8.0	3 IN	8.0	3 IN	8.0	3 IN			
		14.0	10.0	3 IN	10.0	3 IN	10.0	3 IN			
OVER 15 UP TO 20	4	3.5	5.5	2 IN	5.5	2 IN NOTE(2)	5.5	3 IN	3x12	—	—
		7.0	6.0	3 IN	6.0	3 IN	6.0	3 IN			
		14.0	9.0	3 IN	9.0	3 IN	9.0	3 IN			
OVER 20	NOTE (1)										

Footnotes to tables, and general notes on hydraulic shoring, are found in Appendix D, Item (g)
Notes (**1**): See Appendix D, item (g) (1)
Notes (**2**): See Appendix D, Item (g) (2)
* Consult product manufacturer and/or qualified engineer for Section Modulus of available wales.

TABLE D - 1.4
ALUMINUM HYDRAULIC SHORING
WALER SYSTEMS
FOR SOIL TYPE C

DEPTH OF TRENCH (FEET)	WALES		HYDRAULIC CYLINDERS						TIMBER UPRIGHTS		
			WIDTH OF TRENCH (FEET)						MAX.HORIZ SPACING (ON CENTER)		
	VERTICAL SPACING (FEET)	* SECTION MODULUS (IN^3)	UP TO 8		OVER 8 UP TO 12		OVER 12 UP TO 15		SOLID SHEET	2 FT.	3 FT.
			HORIZ. SPACING	CYLINDER DIAMETER	HORIZ. SPACING	CYLINDER DIAMETER	HORIZ. SPACING	CYLINDER DIAMETER			
OVER 5 UP TO 10	4	3.5	6.0	2 IN	6.0	2 IN NOTE(2)	6.0	3 IN	3x12	—	—
		7.0	6.5	2 IN	6.5	2 IN NOTE(2)	6.5	3 IN			
		14.0	10.0	3 IN	10.0	3 IN	10.0	3 IN			
OVER 10 UP TO 15	4	3.5	4.0	2 IN	4.0	2 IN NOTE(2)	4.0	3 IN	3x12	—	—
		7.0	5.5	3 IN	5.5	3 IN	5.5	3 IN			
		14.0	8.0	3 IN	8.0	3 IN	8.0	3 IN			
OVER 15 UP TO 20	4	3.5	3.5	2 IN	3.5	2 IN NOTE(2)	3.5	3 IN	3x12	—	—
		7.0	5.0	3 IN	5.0	3 IN	5.0	3 IN			
		14.0	6.0	3 IN	6.0	3 IN	6.0	3 IN			
OVER 20	NOTE (1)										

Footnotes to tables, and general notes on hydraulic shoring, are found in Appendix D, Item (g)
Notes (1): See Appendix D, item (g) (1)
Notes (2): See Appendix D, Item (g) (2)
* Consult product manufacturer and/or qualified engineer for Section Modulus of available wales.

APPENDIX E TO SUBPART P OF PART 1926—ALTERNATIVES TO TIMBER SHORING

Figure 1. Aluminum Hydraulic Shoring

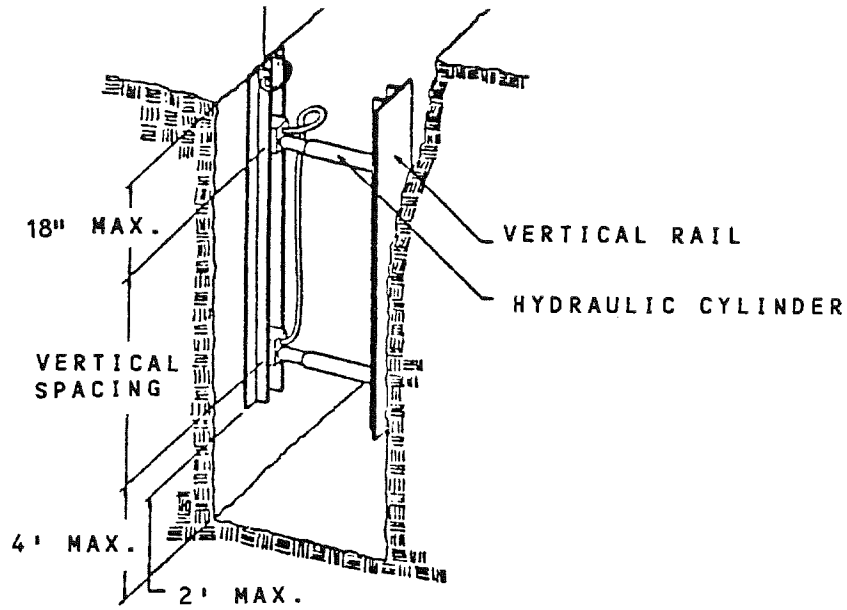

Figure 2. Pneumatic/hydraulic Shoring

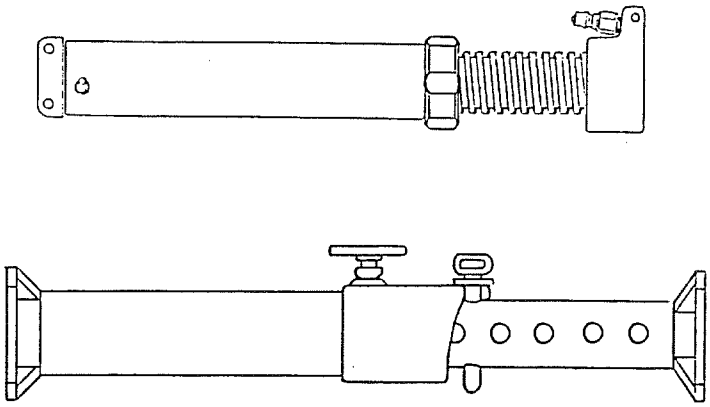

Figure 3. Trench Jacks (Screw Jacks)

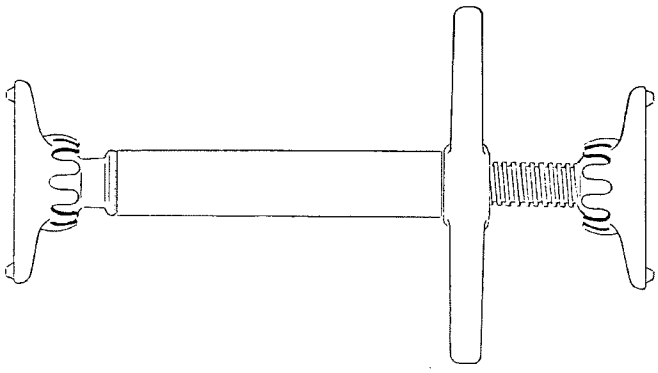

Figure 4. Trench Shields

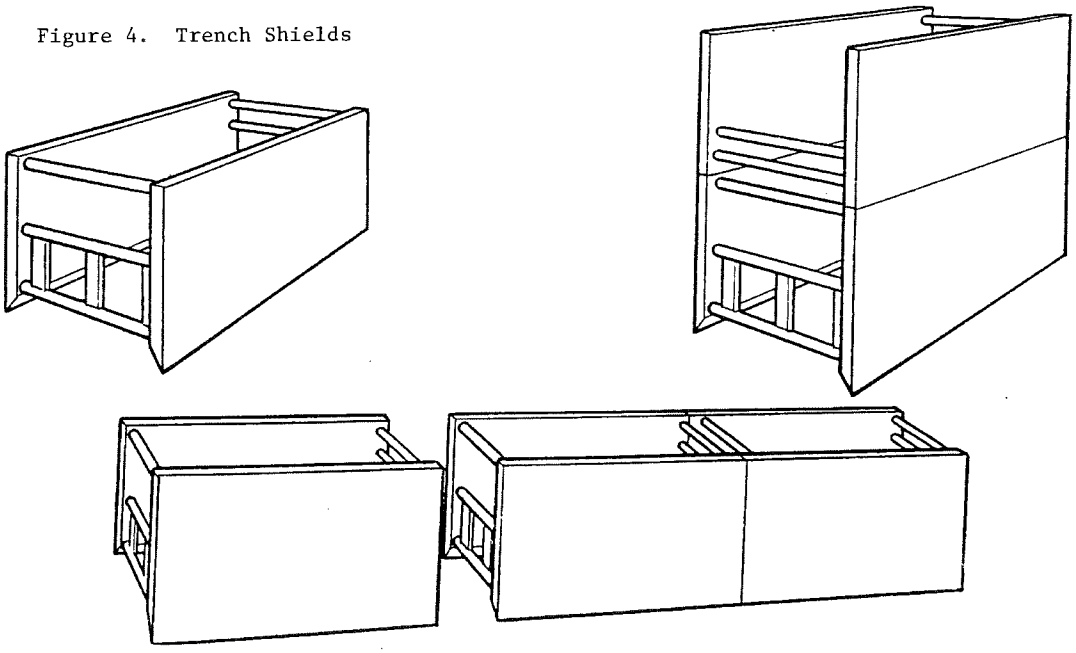

APPENDIX F TO SUBPART P OF PART 1926—SELECTION OF PROTECTIVE SYSTEMS

The following figures are a graphic summary of the requirements contained in subpart P for excavations 20 feet or less in depth. Protective systems for use in excavations more than 20 feet in depth must be designed by a registered professional engineer in accordance with §1926.652 (b) and (c).

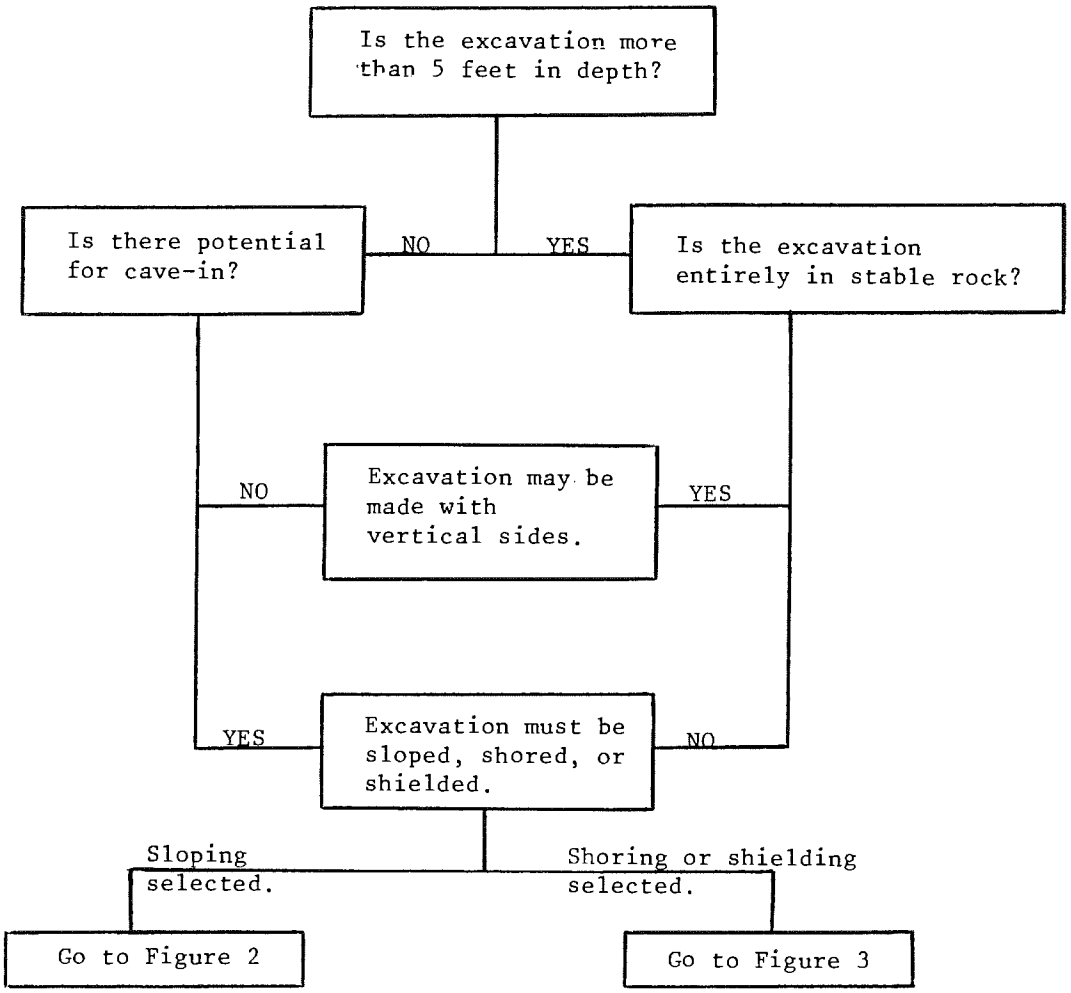

FIGURE 1 - PRELIMINARY DECISIONS

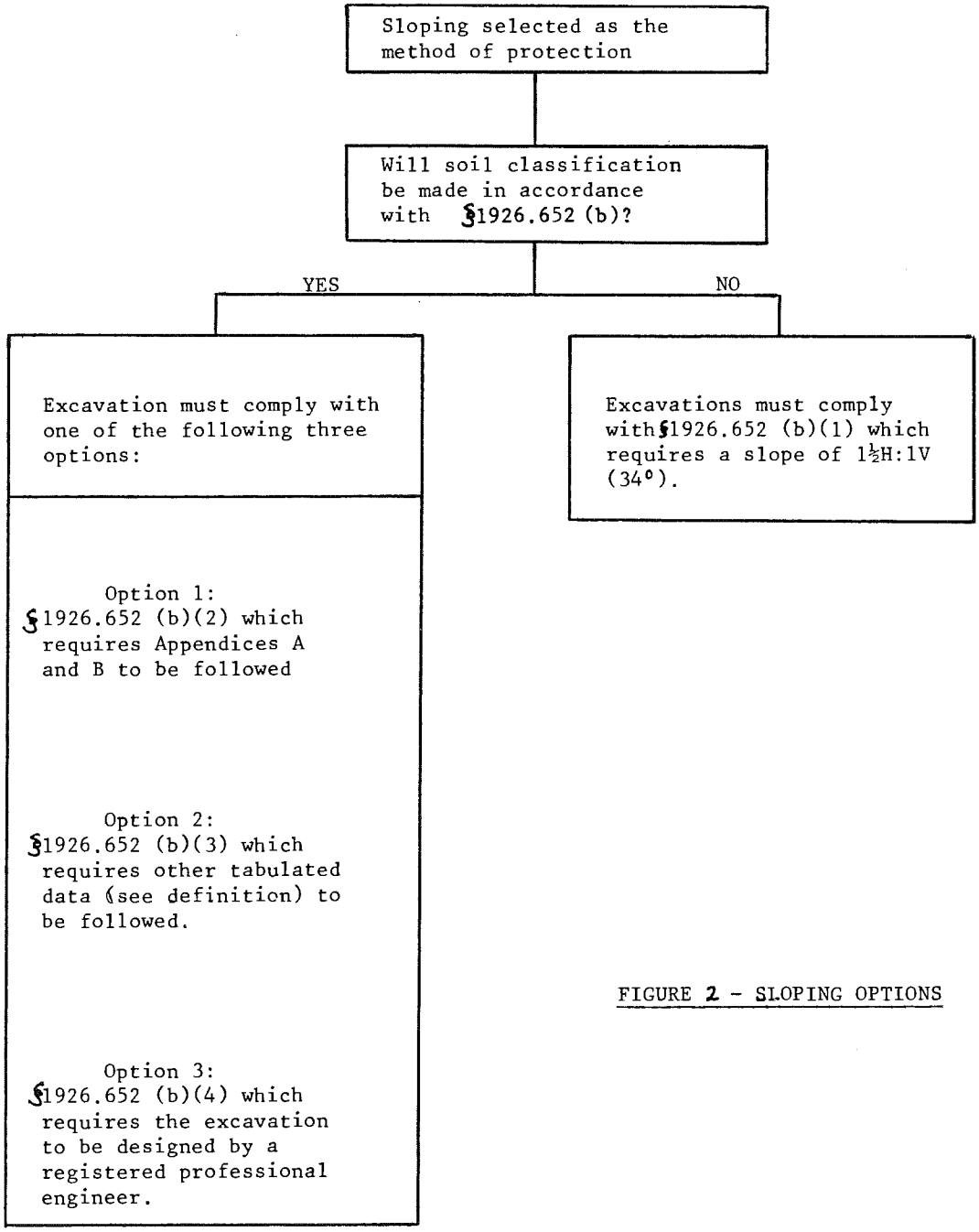

FIGURE 2 - SLOPING OPTIONS

Shoring or shielding selected as the method of protection.

Soil classification is required when shoring or shielding is used. The excavation must comply with one of the following four options:

Option 1
§1926.652 (c)(1) which requires Appendices A and C to be followed (e.g. timber shoring).

Option 2
§1926.652 (c)(2) which requires manufacturers data to be followed (e.g. hydraulic shoring,trench jacks, air shores, shields).

Option 3
§1926.652 (c)(3) which requires tabulated data (see definition) to be followed (e.g. any system as per the tabulated data).

Option 4
§1926.652 (c)(4) which requires the excavation to be designed by a registered professional engineer (e.g. any designed system).

FIGURE 3 - SHORING AND SHIELDING OPTIONS

DIVISION 1 - GENERAL REQUIREMENTS

Table of Contents

SUMMARY OF WORK - Section 01010....1
01010 - Summary of Work....1
MEASUREMENT AND PAYMENT - SECTION 01020....1
01020 - Measurement and Payment....1
COORDINATION - SECTION 01040....2
01046 - Coordination with Existing Utilities....2
REGULATORY REQUIREMENTS - SECTION 01060....2
01062 - City of Huntsville Permit Requirements....2
01065 - Landfill Dumping Requirements for Construction Contractors....2
REFERENCE STANDARDS - SECTION 01090....3
01090 - Reference Standards....3
PROJECT MEETINGS - SECTION 01200....3
01220 - Preconstruction Conference....3
SUBMITTALS - SECTION 01300....4
01340 - Shop Drawings, Product Data/Samples....4
QUALITY CONTROL - SECTION 01400....5
01410 - Testing Laboratory Services....5
01440 - Contractor's Quality Control....6
CONSTRUCTION FACILITIES AND TEMPORARY CONTROLS - SECTION 01500....7
01530 - Barriers and Enclosures....7
01532 – Protection of Trees, Plants and Shrubs....7
01540 - Traffic Controls....7
01560 - Temporary Erosion/Sediment Controls....8
01565 - Survey Controls....9
01581 - Use of Premises....9
01590 - Field Offices....10
01591 - Project Information Sign....10
MATERIAL AND EQUIPMENT - SECTION 01600....12
01620 - Storage and Protection....12
01625 - Water for Construction....12
01626 - Electricity for Construction....12
CONTRACT CLOSEOUT - SECTION 01700....13
01710 - Clean-up....13
01720 - Project Record Drawings ("As-Built" Drawings)....13
01730 - Project Closeout Documents....14

SUMMARY OF WORK - Section 01010

<u>01010 - Summary of Work</u>

PART 1 GENERAL

1.01 SUMMARY

A. The "Project" and "Work" of this Contract is title "Sam Houston Avenue Waterline Replacement" and consists of the installation of ±5,420 LF of 12" waterline, & ±240 LF of 6" waterline, 44 service connections, ±50 LF of 20" Steel Encasement and associated pavement repair.

B. The "Work" will consist of, but not necessarily limited to the following:

1. Installing new waterline and connecting to existing water lines, including all existing service lines, by open cut and/or boring.
2. Repair existing HMAC pavement, concrete driveways, and concrete sidewalks.

C. Related work:

1. Documents affecting work of this Section include, but are not necessarily limited to, General Conditions, Supplementary Conditions, and other documents as set forth by the OWNER.

END OF SECTION 01010

MEASUREMENT AND PAYMENT - SECTION 01020

<u>01020 - Measurement and Payment</u>

PART 1 GENERAL

1.01 SUMMARY

A. Measurement and Payment for the Project will be processed in accordance Article 14 of the General Conditions.

B. Modifications to the Contract Price or Contract Time shall be accomplished by Change Orders. Change Orders shall be processed in accordance with Article 10 of the General Conditions.

1.02 PAYMENT OF INCIDENTAL ITEMS

A. For unit price contracts, the payment for all labor, materials, equipment, supervision, overhead, and associated costs to complete the project contemplated by the drawings and/or specifications shall be according to the unit items set forth in the Bid Schedule. Payment for items required, but not set forth in the Bid Schedule as separate pay items, shall be considered as incidental and shall be included in the various items provided for in the Bid Schedule.

B. For lump sum contracts, the lump sum specified in the Bid Schedule shall include all necessary labor, materials, equipment, supervision, overhead and associated costs to complete the project contemplated by the drawings and/or these specifications, whether specifically listed on the Bid Schedule, or not.

END OF SECTION 01020

COORDINATION - SECTION 01040

01046 - Coordination with Existing Utilities

PART 1 GENERAL

1.01 SUMMARY

A. The location of existing utilities, where shown, are approximate only. There may exist utilities which are not shown. This CONTRACTOR shall be responsible for locating and protecting all utilities. The existence of utilities not shown shall not be grounds for additional compensation.

1.02 REQUIREMENT

A. The CONTRACTOR shall contact each utility company ahead of performing the work, and request the utility to locate its lines. Failure of the utility to locate, or improper location by the utility, shall not result in additional cost to the OWNER.

1.03 PROTECTION OF EXISTING UTILITIES

A. All OWNER'S utilities damaged by the CONTRACTOR shall be repaired by the CONTRACTOR at his expense. Materials used in repair of utilities shall conform to these specifications. The CONTRACTOR shall notify any utility customer in advance of shutting-off such utility service.

B. Existing water and sewer lines damaged shall be repaired within four (4) hours on the day damaged. OWNER shall operate his existing water valves in his system. However, he does not guarantee 100% shut-off of existing water lines.

C. Where existing facilities of the OWNER or its customers are specifically designated to be connected to the facilities constructed herein, this CONTRACTOR shall do so under the OWNER'S supervision. If required by the OWNER, these connections will have to be made during the period from midnight to 6:00 a.m.

REGULATORY REQUIREMENTS - SECTION 01060

01062 - City of Huntsville Permit Requirements

PART I GENERAL

1.01 SUMMARY

A. The CONTRACTOR shall procure and pay all permits, licenses and approvals for execution of this contract. The OWNER shall issue “NO FEE” permits for all work permitted by it.

01065 - Landfill Dumping Requirements for Construction Contractors

PART 1 GENERAL

1.01 SUMMARY

A. All material brought to the landfill will be charged a dumping fee.

B. Trees, stumps, and large limbs over 4" in diameter must be cut no longer than 4' in length.

C. Trees, stumps, and large limbs must be separated from garbage and trash.

D. Dirt which is attached to the tree stumps must be removed.

E. Concrete and brick must be separated from garbage and trash.

END OF SECTION 01060

REFERENCE STANDARDS - SECTION 01090

01090 - Reference Standards

PART 1 GENERAL

1.01 SUMMARY

A. These contract documents contain references to standard specifications as adopted by the American Waterworks Association (AWWA), the American Society of Testing Material (ASTM), the American Association of State Highway and Transportation Officials (AASHTO), the Texas Department of Transportation (TxDOT), and the American National Standards Institute (ANSI). All such references shall be construed to refer to the designated standard and the latest revision thereof, regardless of the specification date shown herein.

END OF SECTION 01090

PROJECT MEETINGS - SECTION 01200

01220 - Preconstruction Conference

PART 1 GENERAL

1.01 SUMMARY

A. To help clarify construction contract administration procedures, a preconstruction Conference will be conducted as described in this Section.

1.02 SUBMITTALS

A. Advise the ENGINEER at least 24 hour in advance of the meeting of items to be added to the agenda.

B. The CONTRACTOR shall furnish to the ENGINEER a project schedule at the meeting. The schedule shall show the major items of work to be constructed and the anticipated completions dates.

1.03 PRECONSTRUCTION CONFERENCE

A. The Conference will be held prior to the beginning of any construction. This meeting will be attended by the CONTRACTOR, the OWNER, the ENGINEER, all subcontractors, and any governmental agencies involved in administration of the project. The meeting date will be established by the ENGINEER after the taking of bids.

B. Minimum Agenda:

1. Organizational arrangement of CONTRACTOR's forces and personnel, and those of subcontractors, materials suppliers, and the ENGINEERS;
2. Channels and procedures for communications
3. Construction schedule, including sequence of critical work:
4. Contract Documents, including distribution of required copies of Drawings and revisions;
5. Processing of Shop Drawings, and other data submitted to the ENGINEER for review;
6. Processing of field decisions and Change Orders;

END OF SECTION 01200

SUBMITTALS - SECTION 01300

<u>01340 - Shop Drawings, Product Data/Samples</u>

PART 1 GENERAL

1.01 SUMMARY

A. Make submittals required by the Contract Documents, and revise and resubmit as necessary to establish compliance with the specified requirements, all as described in this Section.

B. Related work:

1. Documents affecting work of this Section include, but are not necessarily limited to, General Conditions, Supplementary Conditions, and Sections in Division 1 of these Specifications.
2. Individual requirements for submittals also may be described in pertinent Sections of these Specifications.

C. Work not included:

1. Submittals not requested will not be reviewed by the ENGINEER.
2. The CONTRACTOR may require his subcontractors to provide drawings, setting diagrams, and similar information to help coordinate the Work, but such data shall remain between the CONTRACTOR and his subcontractors and will not be reviewed by the ENGINEER unless specifically called for within the Contract Documents.

1.02 SUBMITTALS

A. Make submittals of Shop Drawings, Samples, substitution requests, and other items in accordance with the provisions of this Section.

1.03 QUALITY ASSURANCE

A. Coordination of submittals:

1. Prior to each submittal, carefully review and coordinate all aspects of each item being submitted.
2. Verify that each item and the submittal for it conform in all respects with the specified requirements.
3. By affixing the CONTRACTOR's signature to each submittal, certify that this coordination has been performed.

Part 2 - Products

2.01 SHOP DRAWINGS

2.02 MANUFACTURE'S LITERATURE

2.03 SAMPLES

2.04 COLORS AND PATTERNS

A. The OWNER will select the desired colors and patterns for such items.

Part 3 - Execution

3.01 IDENTIFICATION OF SUBMITTALS

A. Consecutively number all submittals.

1. When material is resubmitted for any reason, transmit under a new letter of transmittal and with a new transmittal number.
2. On resubmittals, cite the original submittal number for reference.

B. Accompany each submittal with a letter of transmittal showing all information required for identification and checking.

C. On at least the first page of each submittal, and elsewhere as required for positive

identification, show the submittal number in which the item was included.

3.02 GROUPING OF SUBMITTALS

A. Unless otherwise specified, make submittals in groups containing all associated items to assure that information is available for checking each item when it is received.
   1. Partial submittals may be rejected as not complying with the provisions of the Contract.
   2. The CONTRACTOR may be held liable for delays so occasioned.

3.03 TIMING OF SUBMITTALS

A. Make submittals far enough in advance of scheduled dates for installation to provide time required for reviews, for securing necessary approvals, for possible revisions and resubmittals, and for placing orders and securing delivery.

B. In scheduling, allow at least ten working days for review by the ENGINEER following the ENGINEER's receipt of the submittal.

3.04 REQUIRED SUBMITTALS

A. Refer to each section for required submittals.

END OF SECTION 01300

QUALITY CONTROL - SECTION 01400

<u>01410 - Testing Laboratory Services</u>

PART 1 GENERAL

1.01 SUMMARY

A. This Section describes testing and inspecting to be provided by the OWNER, plus cooperation required from the CONTRACTOR with the OWNER's selected testing agency and other responsible for testing and inspecting the Work.

B. Related work:
   1. Documents affecting work of this Section include, but are not necessarily limited to, General Conditions, Supplementary Conditions, and Sections in Division 1 of these Specifications.
   2. Requirements for testing may be described in various Sections of these Specifications.
   3. Where no testing requirements are described, but the OWNER decides that testing is required, the OWNER may require such testing to be performed under current pertinent standards for testing. Payment for such testing will be made as described in this Section.

C. Work not included:
   1. Selection of testing laboratory/geotechnical engineer: The OWNER will select a prequalified independent testing laboratory/geotechnical provider.

1.02 QUALITY ASSURANCE

A. The testing laboratory will be qualified to the OWNER's approval.

B. Testing, when required, will be in accordance with all pertinent codes and regulations, and with selected standards of the American Society for Testing and Materials.

1.03 DELIVERY, STORAGE, AND HANDLING

A. Comply with pertinent provisions of Section 01620.

B. Promptly process and distribute required copies of test reports and related instructions to assure necessary retesting and replacement of materials with the least possible delay in progress of the Work.

Part 2 - Products

2.01 PAYMENT FOR TESTING

A. Initial services of testing laboratory will be paid for by OWNER.

B. Retesting: When initial tests indicate non-compliance with the Contract Documents, subsequent retesting occasioned by the non-compliance shall be performed by the same testing agency, and costs thereof will be deducted by the OWNER from the Contract Sum.

2.02 CONTRACTOR's CONVENIENCE TESTING

A. Inspecting and testing performed exclusively for the CONTRACTOR's convenience shall be the sole responsibility of the CONTRACTOR.

Part 3 - Execution

3.01 COOPERATION WITH TESTING LABORATORY

A. Representatives of the testing laboratory shall have access to the Work at all times and at all locations where the Work is in progress. Provide facilities for such access to enable the laboratory to perform its functions properly.

3.02 TAKING SPECIMENS

A. All specimens and samples for testing, unless otherwise provided in the Contract Documents, shall be taken by the testing personnel. All sampling equipment and personnel will be provided by the testing laboratory. All deliveries of specimens and samples to the testing laboratory will be performed by the testing laboratory.

3.03 SCHEDULE FOR TESTING

A. Establishing schedule:

1. By advance discussion with the testing laboratory selected by the OWNER, determine the time required for the laboratory to perform its test and to issue each of its findings.
2. Provide all required time within the construction schedule.

B. Revising schedule: When changes of the construction schedule are necessary during construction, coordinate all such changes with the testing laboratory as required.

C. Adherence to schedule: When the testing laboratory is ready to test according to the established schedule, but is prevented from testing or taking specimens due to incompleteness of the Work, all extra charges for testing attributable to the delay may be back-charged to the CONTRACTOR and shall not be borne by the OWNER.

<u>01440 - Contractor's Quality Control</u>

PART 1 GENERAL

1.01 SUMMARY

A. All equipment, materials, and articles incorporated into the work shall be new, and of a quality equal to, or better than, specified herein. If not specified herein, the quality shall be satisfactory to the ENGINEER. All workmanship shall be of acceptable quality as determined by the ENGINEER, and the OWNER may require the CONTRACTOR to dismiss from the work any employee or employees the OWNER may deem incompetent, unqualified, unreliable, careless, or insubordinate.

END OF SECTION 01400

CONSTRUCTION FACILITIES AND TEMPORARY CONTROLS - SECTION 01500

01530 - Barriers and Enclosures

PART 1 GENERAL

1.01 SUMMARY

A. The CONTRACTOR shall furnish, erect, and maintain adequate warning devices and lighting to protect the public from all construction hazards arising from the building of this project. The CONTRACTOR shall be totally responsible and solely liable for their adequacy and for any claims or accidents resulting from failure to provide and properly maintain the warning devices and lighting.

1.02 RELATED ITEMS

A. Division 1 - Section 01060 - Regulatory Requirements

01532 – Protection of Trees, Plants and Shrubs

PART 1 GENERAL

1.01 SUMMARY

A. The CONTRACTOR shall protect all trees, plants, shrubs and other landscaping which are not specifically within the limits of new construction as shown on the project plans. Removals of any trees, plants and shrubs within the project limits shall only be at the direction of the ENGINEER or OWNER.

01540 - Traffic Controls

PART 1 GENERAL

1.01 SUMMARY

A. The CONTRACTOR shall prepare a traffic control plan (TCP) for this project. The TCP shall be approved by the OWNER, ENGINEER and any other regulating entity directly involved with the Work (i.e. TxDOT, etc.) before any construction begins on this Project.

1.02 SUBMITTALS

A. The CONTRACTOR shall submit four (4) copies of the proposed TCP to the ENGINEER for approval prior to construction.

1.03 TRAFFIC ACCESS

A. The CONTRACTOR shall provide temporary "No Parking" and all other signs which may be deemed necessary for the safe and orderly conduct of vehicular traffic as directed by the ENGINEER and as specified herein. He shall also provide a barricaded area in the parking lane for pedestrian traffic during such time as the parkway is unfit to be used for pedestrian traffic.

B. At such times as driveways are inaccessible due to the CONTRACTOR'S work they shall be blocked by two (2) delineators. Driveways that are ramped or planked for temporary access shall be provided with a barricade or delineator at each side. The CONTRACTOR shall give 24-hour notice to affected property owners prior to blocking any driveway.

C. The CONTRACTOR shall provide access for refuse collection on the regularly scheduled days. He shall also facilitate or assist in the collection where such work is hampered by his operations.

1.04 STREET CLOSURES, DETOURS AND BARRICADES

A. The CONTRACTOR shall not close <u>any</u> street within the City of Huntsville without first obtaining the approval of the ENGINEER. Barricading, traffic control and detour diagrams shall be submitted by the CONTRACTOR as required by the ENGINEER.

B. The CONTRACTOR shall maintain traffic control and shall provide and install barricades, delineators, warning devices and construction signs in accordance with Sections 7.7 land 7.8 of the Texas Highway Department "Standard Specifications for Construction of Highways, Streets and Bridges", latest edition, and in accordance with the Texas Manual on Uniform Traffic Control Devices, latest edition.

C. The CONTRACTOR shall provide and maintain Class II barricades along excavation edges parallel to the flow of traffic at a spacing of twenty-five feet (25'). Class II barricades mounted with flashers shall be installed around work areas in parkways. Class II barricades shall have alternating black and reflectorized white (or yellow) stripes at an angle of 45 degrees. The stripe width shall be four to six inches (4" – 6").

D. During paving operations barricades may be supplemented with minimum size eighteen-inch (18") high traffic cones and delineators such that spacing between barricades and/or cones or delineators is no greater than twenty-five feet (25'). At all access points such as intersecting streets, alleys and driveways, barricades and/or cones shall be provided at five-foot (5') intervals so as to prevent vehicular access to the paving area. Where access from an intersecting street is prohibited, a "Road Closed" sign shall be provided at the nearest prior intersection. "No Left Turn" signs shall be provided wherever required by the ENGINEER.

E. When one-way access from a side street or alley is permitted, barricades and cones shall be provided at five-foot (5') intervals for a distance of fifty feet (50') on either side of the centerline of the intersecting street or alley.

F. Should the CONTRACTOR fail to furnish a sufficient number of traffic and/or pedestrian safety devices, the City will place such necessary items and the CONTRACTOR shall be liable for the cost to the City for providing such devices.

G. Judgment as to adequate or sufficient barricading shall be that which is adequate or sufficient in the opinion of the ENGINEER.

H. The CONTRACTOR shall relocate, preserve and maintain the visibility of all existing signs within the project limits which affect the flow of traffic, as directed by the Engineer. Any signs which are damaged or found to be missing during the course of construction shall be replaced by the CONTRACTOR at his expense as directed by the ENGINEER. All other signs that interfere with the course of work and are not necessary for the safe flow of traffic will be removed and replaced by the City. Traffic control signs include Stop Signs, Speed Limit, Parking Restrictions and other regulatory signs.

I. Unless otherwise specified in these documents or on the plans, traffic control and safety requirements shall be considered as part of or incidental to all related bid items and the costs therefor are to be included in the prices bid for such related items of work.

01560 - Temporary Erosion/Sediment Controls

PART 1 GENERAL

1.01 SUMMARY

A. The CONTRACTOR shall be responsible for the transportation of sediment from the job site. Erosion and sediment control devices shall be place at strategic locations to eliminate the transportation of sediment from the job site.

1.02 MAINTENANCE AND REMOVAL

A. The CONTRACTOR shall maintain these controls during the construction until all areas are stabilized.

01565 - Survey Controls

PART I GENERAL

1.01 SUMMARY

A. The ENGINEER shall furnish control hubs for lines and bench marks for elevations for the proper prosecution of the work performed under this contract. The CONTRACTOR shall be held responsible for the proper preservation of all bench marks and stakes. If, in the opinion of the ENGINEER, any marks or stakes have been destroyed or carelessly disturbed by the CONTRACTOR or his employees, the cost of replacing them may be charged against the CONTRACTOR, to be deducted from any money due him under this contract.

B. The CONTRACTOR shall be responsible for the construction staking of the work in accordance with the plans and shall furnish all labor, materials, equipment and services required for the proper staking of the work.

C. The CONTRACTOR shall install and maintain sufficient batter boards to assure the proper performance of the contract and the construction of all items to the required lines and grades; for this purpose the CONTRACTOR shall maintain capable personnel on the job at all times. If, in the opinion of the ENGINEER, the CONTRACTOR is not maintaining sufficient batter boards and intermediate line and grade stakes for proper prosecution of the work, the ENGINEER shall have the authority to stop the construction until such time as the CONTRACTOR provides these items.

D. The CONTRACTOR must satisfy himself before commencing work as to the correctness and meaning of all stakes, measurements, and marks. No claim will be entertained on account of alleged inaccuracies unless the CONTRACTOR notifies the ENGINEER in writing in time for the ENGINEER to verify or check such stakes and marks before the work is commenced.

01581 - Use of Premises

PART 1 GENERAL

1.01 SUMMARY

A. This section covers the use of the premises by the CONTRACTOR and clean-up required by the CONTRACTOR during the project.

1.02 REQUIREMENTS

A. Use of Premises:

1. Every precaution against injuries to persons or damage to property.
2. All rubbish and other foreign substances shall be removed from the project site and satisfactorily disposed of.
3. All job sites including streets, easements, rights-of-way, roads, and areas used by the CONTRACTOR shall be left in a clean, neat condition satisfactory to their owner. The OWNER'S representative may also require clean-up of the job site or easements and rights-of-way periodically during the progress of the work.
4. Burning of brush on the work sites will not be permitted without the landowner's permission, and then only in strict compliance with local, state and federal laws. Any surplus excavated earth not designated for reuse shall be disposed of at approved locations secured by the CONTRACTOR at his expense, and rough leveled to the landowner's satisfaction.
5. Store his apparatus, materials, supplies and equipment in such orderly fashion at the site of the work as will duly interfere with the progress of his work or the work of any other contractors.
6. Place upon the work or any part thereof only such loads as are consistent with the safety

of that portion of the work.

B. Clean-up:
   1. Clean-up frequently all refuse, rubbish, scrap materials, and debris caused by his operations, to the end that at all times the site of the work shall present a neat, orderly, and workmanlike appearance.
   2. All cutting, fitting or patching of his work required to make the same to conform to the plans and specifications and, except with the consent of the Owner's Representative, not to cut or otherwise alter the work of any other Contractor.

<u>01590 - Field Offices</u>

PART 1 GENERAL

1.01 SUMMARY

A. The CONTRACTOR is not required to furnish and maintain a field office during construction.

END OF SECTION 01500

<u>01591 - Project Information Sign</u>

PART 1 GENERAL

1.01 SUMMARY

A. At the explicit direction and stated requirement of the City Engineer this/these item(s) shall include the construction, painting, erection, maintenance and removal of project signs for the number of signs indicated in the construction documents at the locations specified therein. Upon completion of the project, the signs shall become the property of the Contractor.

1.02 REQUIREMENTS

A. The sign shall be constructed from 3/4 inch exterior grade plywood with one smooth side or City Engineer approved equivalent. Paint for the sign shall be a commercial grade exterior paint that will not show signs of fading during the complete construction period. If the sign fades before completion of the project, the Contractor shall repaint the sign to its original quality. Painting of the sign shall be of professional quality equivalent to commercial sign painting. Mounting posts shall be either redwood or pressure treated pine.

B. Mounting posts shall be buried to the depth indicated on the drawing and hand compacted to 6 inch lifts. The sign shall be attached to the mounting posts with 3 bolts per post. Bolts shall be standard grade, minimum 3/8 inch diameter with flat washers on both sides, lock washer and double nuts. Bolts shall be spaced on the sign face between lettering so as not to obscure the wording on the sign and shall be as evenly spaced as possible.

C. The project sign(s) shall be in place within 14 calendar days from the date the Owner awards the contract and shall remain in place during the entire construction period. The project sign(s) shall be removed within 14 calendar days after the Owner’s acceptance of the project improvements.

D. Required Content on Project Information Signs:
   1. City name and logo
   2. Project name
   3. Funding source
   4. Project design engineer’s name(s), location, phone number
   5. General contractor’s name(s), location, phone number
   6. Optional information: name and/or address of owner, developer, architect, engineer or other contractors on site

E. The signs CANNOT be located within the clear vision or (sight triangle) as depicted in table 10-2 of the City of Huntsville Development Code.

1.03 EXAMPLE

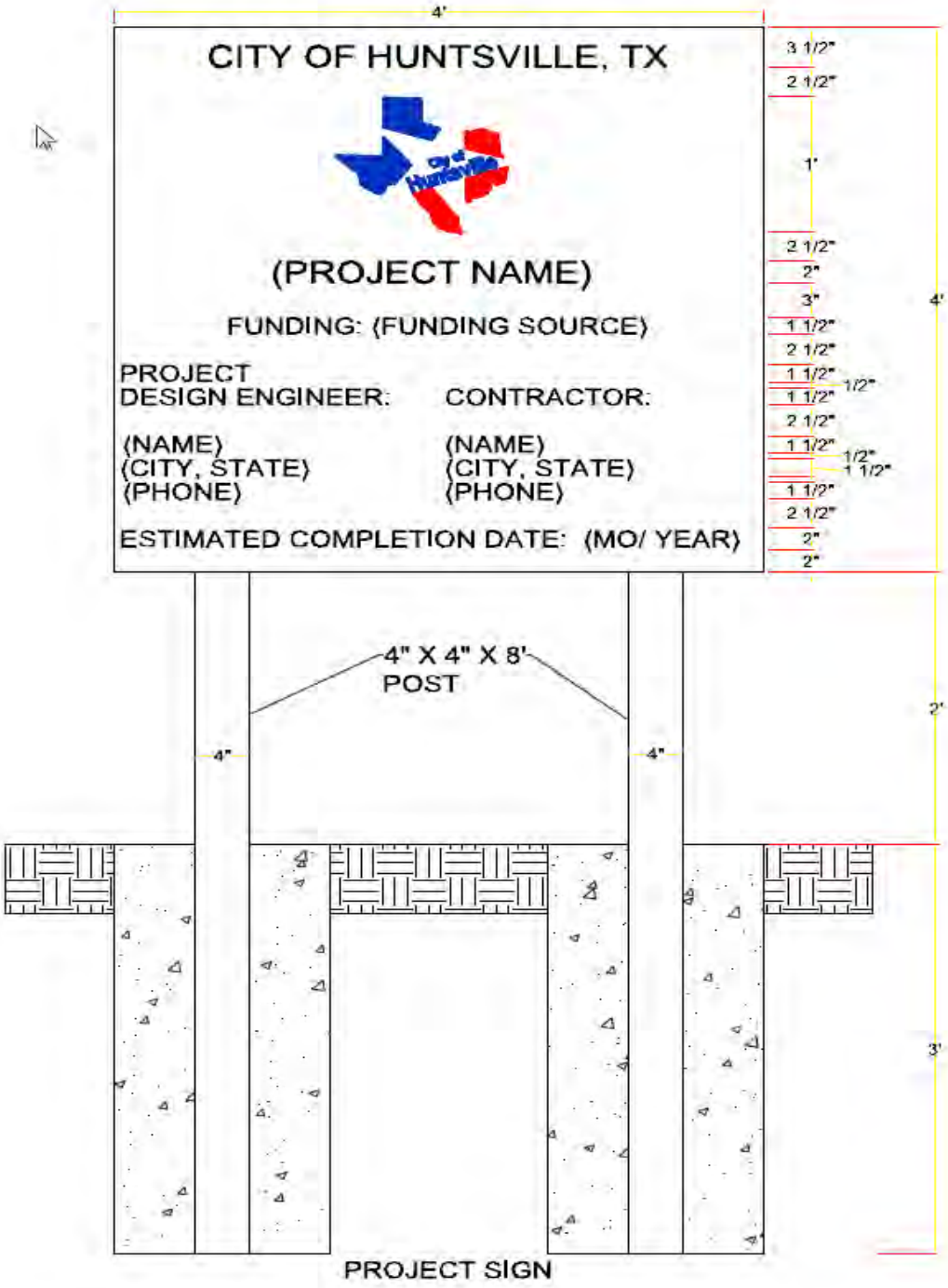

END OF SECTION 01500

MATERIAL AND EQUIPMENT - SECTION 01600

01620 - Storage and Protection

PART 1 GENERAL

1.01 SUMMARY

A. Protect products scheduled for use in the Work by means including, but not necessarily limited to, those described in this Section.

B. Related work:

1. Documents affecting work of this Section include, but are not necessarily limited to, General Conditions, Supplementary Conditions, and Sections in Division 1 of these Specifications.
2. Additional procedures also may be prescribed in other Sections of these Specifications.

1.02 MANUFACTURER'S RECOMMENDATIONS

A. Except as otherwise approved by the ENGINEER, determine and comply with manufacturers' recommendations on product handling, storage, and protection.

1.03 PACKAGING

A. Deliver products to the job site in their manufacturer's original container, with labels intact and legible.

1. Maintain packaged materials with seals unbroken and labels intact until time of use.
2. Promptly remove damaged material and unsuitable items from the job site, and promptly replace with material meeting the specified requirements, at no additional cost to the OWNER.

B. The ENGINEER may reject as non-complying such material and products that do not bear identification satisfactory to the ENGINEER as to manufacturer, grade, quality, and other pertinent information.

1.04 REPAIRS AND REPLACEMENTS

A. In event of damage, promptly make replacements and repairs to the approval of the ENGINEER and at no additional cost to the OWNER.

B. Additional time required to secure replacements and to make repairs will not be considered by the ENGINEER to justify an extension in the Contract Time of Completion.

01625 - Water for Construction

PART 1 GENERAL

1.01 SUMMARY

A. The OWNER shall furnish all water necessary for the completion of the work. All costs associated with collecting and transporting of water shall be borne by the CONTRACTOR.

01626 - Electricity for Construction

PART 1 GENERAL

1.01 SUMMARY

A. The CONTRACTOR is responsible for providing any electrical power for the work

END OF SECTION 01600

CONTRACT CLOSEOUT - SECTION 01700

01710 - Clean-up

PART 1 GENERAL

1.01 SUMMARY

A. At the conclusion of the Work, and prior to final payment, all tools, temporary structures, and materials belonging to the CONTRACTOR shall be promptly removed.

1.02 REQUIREMENTS

A. All rubbish and other foreign substances shall be removed from the project site and satisfactorily disposed of.

B. All job sites including streets, easements, rights-of-way, roads, and areas used by the CONTRACTOR shall be left in a clean, neat condition satisfactory to their owner. The OWNER'S representative may also require clean-up of the job site or easements and rights-of-way periodically during the progress of the work.

C. Burning of brush on the work sites will not be permitted without the landowner's permission, and then only in strict compliance with local, state and federal laws. Any surplus excavated earth not designated for reuse shall be disposed of at approved locations secured by the CONTRACTOR at his expense, and rough leveled to the landowner's satisfaction.

01720 - Project Record Drawings ("As-Built" Drawings)

PART 1 GENERAL

1.01 SUMMARY

A. During progress of the job, the CONTRACTOR shall mark up a set of the drawings, including dimensions, to indicate any deviations from the contract drawings.

1.02 SUBMITTAL

A. Prior to submitting request for final payment, submit the final Project Record Drawings to the ENGINEER for review and approval. The Drawings will be reviewed for sufficiency of information, clarity, and readability.

<u>01730 - Project Closeout Documents</u>

PART 1 GENERAL

1.01 SUMMARY

A. Specific closeout documents are required before final payment can be made to the CONTRACTOR.

1.02 RELATED ITEMS

A. Article 14, Sections 14.04 and 14.07 of the General Conditions.

1.03 REQUIREMENTS

A. The Certificate of Substantial Completion must be fully executed before the final application for payment is made by the CONTRACTOR.

B. The Affidavit of Payment and Release of Liens shall be submitted to the ENGINEER. The final application for payment will not be approved until the Affidavit has received by the ENGINEER.

END OF SECTION 01700

This area was intentionally left blank.

DIVISION 2 - SITE WORK

TABLE OF CONTENTS

SECTION 02150
SHORING
SECTION 02222
EXCAVATION, TRENCHING, AND BACKFILLING FOR UTILITIES
SECTION 02229
EXCAVATION SAFETY
SECTION 02230
FLEXIBLE BASE
SECTION 02240
CEMENT STABILIZED SAND
SECTION 02270
SLOPE PROTECTION AND EROSION CONTROL
SECTION 02510
HOT MIX ASPHALTIC CONCRETE PAVEMENT
SECTION 02605
CONDUCTIVE TRACER WIRE
SECTION 02610
PIPE, FITTINGS, AND ASSOCIATED APPURTENANCES
SECTION 02640
VALVES, GAUGES, AND RELATED APPURTENANCES
SECTION 02660
WATER SUPPLY LINES AND PIPING
SECTION 02675
STERILIZATION OF WATER LINES
SECTION 02677
HYDROSTATIC TESTING OF WATER LINES
SECTION 02930
SEEDING, MULCHING AND SODDING

SECTION 02150

SHORING

PART 1 - GENERAL

1.01 SUMMARY

A. As specified in this Section, provide shoring at excavations and elsewhere as required to protect workmen, materials, other properties, and the public.

B. Related work:

1. Documents affecting work of this Section include, but are not necessarily limited to, General Conditions, Supplementary Conditions, and Sections in Division 1 of these Specifications.
2. As established in the General Conditions of the Contract, the CONTRACTOR is solely responsible for means and methods of construction and for the sequences and procedures to be used.

1.02 SUBMITTALS

A. Comply with pertinent provisions of Section 01340.

B. Prior to submitting shoring design for approval of governmental agencies have jurisdiction, submit the design to the ENGINEER for review.

1. The ENGINEER's review will be for space coordination purposes only, and will not relieve the CONTRACTOR of his responsibilities under the Contract.
2. Should changes in the shoring design be required subsequent to the ENGINEER's review, coordinate all such changes with the ENGINEER and secure the ENGINEER's approval of changes in space allocations.

C. Upon completion of construction of this portion of the Work, submit to the ENGINEER two copies of letter signed by the approved shoring design engineer stating that, to the best of the shoring design engineer's knowledge, the shoring system was constructed in accordance with the arrangement reviewed by the ENGINEER.

1.03 QUALITY ASSURANCE

A. Use adequate numbers of skilled workmen who are thoroughly trained and experienced in the necessary crafts and whole are completely familiar with the specified requirements and the methods needed for proper performances of the work of this Section.

B. Employ a qualified engineer, properly permitted to provide such services at the location of the Work, to design the shoring system and to inspect and report on the quality of its construction.

C. Comply with pertinent requirements of governmental agencies having jurisdiction.

D. Coordinate the shoring design and construction with:

1. Soil investigation report prepared for this Work;
2. Structural system established for the Work, including location of columns, pilasters, walls, and other features.

PART 2 – PRODUCTS

2.01 DESIGN

A. Design a shoring system which will safely and adequately prevent collapse of adjacent materials and which will permit construction of the Work to the arrangement shown on the Drawings.

B. Secure all needed approvals, including those of governmental agencies having jurisdiction and of adjacent property OWNER's if required, at no additional cost to the OWNER.

2.02 MATERIALS

A. Provide materials of all kinds as required for execution of the approved shoring system.

PART 3 - EXECUTION

3.01 SURFACE CONDITIONS

A. Examine the areas and conditions under which work of this Section will be performed. Correct conditions detrimental to timely and proper completion of the Work. Do not proceed until unsatisfactory conditions are corrected.

3.02 SHORING

A. Construct and install the shoring system in strict accordance with the design approved by the governmental agencies having jurisdiction, and in strict accordance with the space arrangement approved by the ENGINEER.

END OF SECTION 02150

This area was intentionally left blank.

SECTION 02222

EXCAVATION, TRENCHING, AND BACKFILLING FOR UTILITIES

PART 1 GENERAL

1.01 SUMMARY

A. This section covers the requirements for the excavation, trenching, and backfilling of the following utilities and their respective appurtenances:
   1. Storm Sewers
   2. Sanitary Sewers
   3. Water Lines
   4. Gas Lines

B. RELATED SECTIONS
   1. Section 02240 - Cement Stabilized Sand
   2. Section 02229 - Excavation Safety

1.02 MEASUREMENT AND PAYMENT

A. There will be no direct measurement or separate payment for the items covered under this Section unless otherwise indicated in the bid form. Costs for the excavation, trenching and backfilling of utilities shall be included in the related items of work listed in the bid form. All excavation required for locating existing underground utilities will not be measured or paid for as a separate bid item. Include cost for locating existing underground utilities in the related in the bid form.

1.03 REFERENCES

A. The applicable provisions of the following standards shall apply as if written here in their entirety:
   1. ASTM - American Society for Testing of Materials
   2. OSHA - Occupational Safety and Health Administration
   3. AASHTO - American Association of State Highway and Transportation Officials

1.04 SUBMITTALS

A. When requested, submit amounts of backfill material for evaluation by the ENGINEER.

1.05 SCHEDULING

1.06 No open excavation or trenches shall be left overnight without proper lighting and barricades. Schedule backfilling such that there is a minimum of excavations and trenches that are left open during hours of no work.

PART 2 PRODUCTS

2.01 MATERIALS AND/OR EQUIPMENT

A. Cement Stabilized Sand: When required, provide cement-stabilized sand backfill material in accordance with Section 02240, Cement Stabilized Sand.

B. Bank Sand: When required, provide clean bank sand from an approved source which is free of clay, organic material or other foreign substances. The bank sand shall be such that not more than 12 percent by weight passes the 200 mesh sieve and the plasticity index (P.I.) shall not exceed not 4.0.

C. Select Material: Free flow material with on lumps or other particles large than ½" diameter and have a plasticity index of less than 15.. Select material may be excavated trench material or imported material which is free from rock fragments and clots that will not break down when compacted. Select material shall be free frost, organic materials, and sharp or angular materials which could damage the utility being installed or any coating/cover on the utility being installed.

D. Common Backfill: Common backfill shall be excavated trench material free of organic, soft

or spongy materials.

E. Soil Embedment Materials: Soils to be used for embedment material shall be classified according to the United Soils Classification System (USCS) in ASTM D2487, Standard Method for Classification of Soils for Engineering Purposes. The following USCS Soils Classifications correspond to the soil classifications required for the various types of embedment shown on the plan details and/or listed in other sections of these specifications:

1. Class I Soils: Manufactured angular, granular material, 1/4 to 1-1/2 inches size, including materials having regional significance such as crushed stone or rock, broken coral, crushed slag, cinders, or crushed shells. Class I soils are not defined in ASTM D2487 and are subject to approval before being used.
2. Class II Soils: In accordance with ASTM D2487, less than 5% pass No.200 sieve.
   a. GW Soil Type: Well-graded gravels and gravel-sand mixtures, little or no fines. 50% or more retained on No.4 sieve. More than 95% retained On No.200 sieve. Clean.
   b. GP Soil Type: Poorly graded gravels and gravel-sand mixtures, little or no fines. 50% or more retained on No.4 sieve. More than 95% retained on No.200 sieve. Clean.
   c. SW Soil Type: Well-graded sands and gravelly sands, little or no fines. More than 50% passes No.4 sieve. More than 95% retained on No. 200 sieve. Clean.
   d. SP Soil Type: Poorly graded sands and gravelly sands, little or no fines. More than 50% passes No.4 sieve. More than 95% retained on No. 200 sieve. Clean.
3. Class III Soils. In accordance with ASTM D2487, more than 12% pass No. 200 sieve. Soils with 5% to 12% pass No.200 sieve fall in borderline classification, for example, GP-GC.
   a. GM Soil Type: Silty gravels, gravel-sand-clay mixtures. 50% or more retained on No.4 sieve. More than 50% retained on No.200 sieve.
   b. GC Soil Type: Clayey gravels, gravel-sand-clay mixtures. 50% or more retained on No.4 sieve. More than 50% retained on No.200 sieve.
   c. SM Soil Type: Silty sands, sand-silt mixtures. More than 50% passes No.4 sieve. More than 50% retained on No.200 sieve.
   d. SC Soil Type: Clayey sands, sand-clay mixtures. More than 50% passes No.4 sieve. More than 50% retained on No.200 sieve.
4. Class IV Soils:
   a. ML Soil Type: Inorganic silts, very fine sands, rock flour, silty or clayey fine sands. Liquid limit 50% or less. 50% or more passes No.200 sieve.
   b. CL Soil Type: Inorganic clays of low to medium plasticity, gravel clays, sandy clays, silty clays, lean clays. Liquid limit 50% or less. 50% or more passes No.200 sieve.
   c. MH Soil Type: Inorganic silts, rnicaceous or diatomaceous fine sands or silts, elastic silts. Liquid limit greater than 50%. 50% or more passes No.200 sieve.
   d. CH Soil Type: Inorganic clays Of high Plasticity, fat clays. Liquid limit greater than 50%. 50% or more passes No.200 sieve.
5. Class V Soils:
   a. OL Soil Type: Organic silts and organic silty clays of low plasticity. Liquid limit greater than 50%. 50% or more passes No.200 sieve.
   b. OH Soil Type: Organic clays of medium to high plasticity. Liquid limit greater than 50%. 50% or more passes No.200 sieve.
   c. PT Soil Type: Peat, muck and other highly organic soils.
6. Concrete Embedment: Concrete used for utility embedment shall have minimum strength of 2,000 psi at twenty-eight (28) days. Dry mix will not be permitted. The concrete cushion portion of the embedment or encasement shall be mixed moist or damp

such that a slump of not more than 1-inch is achieved. Concrete for the sides and top, if required, shall be mixed such that a slump of not less than 1-inch, and not more than 3-inches, is obtained.

PART 3 EXECUTION

3.01 PREPARATION

A. Location of Existing Utilities: CONTRACTOR shall contact 1-800-DIG-TESS at least 48 hours prior to starting work. CONTRACTOR shall also contact other know utility companies to locate their respective utilities. Excavating shall be confined to Monday through Friday without prior OWNER approval. CONTRACTOR shall have final responsibility to verify the existence and location of all existing underground utilities along the route of the work..

B. Protection of Existing Utilities: CONTRACTOR shall take the necessary precautions to protect all existing utilities from damage due to his operations. Any damage to the existing utilities will be repaired at the CONTRACTOR's expense by qualified personnel. In order to protect existing utilities that are required to be exposed, CONTRACTOR's operation shall be such that a sufficient distance back from the edge of the excavation is maintained to avoid overloading and to prevent slides or caving. No unnecessary excavation or exposing of existing underground utilities win be allowed.

C. Convenience to Public: All trenching and excavating shall be performed in a manner that will cause as little inconvenience to the public as possible. All excavated material shall be kept trimmed such that minimum inconvenience is caused to the public or adjoining property owners. At street crossings, sidewalks and other points deemed necessary by the ENGINEER, trenches and excavations shall be bridged in a secure manner so as to prevent serious interruption of travel and to provide access to fire hydrants, public property, and private property. All bridging shall be pre-approved by the ENGINEER.

D. Traffic Control: Refer to approved traffic control plan.

3.02 ERECTION/INSTALLATION/APPLICATION AND/OR CONSTRUCTION

A. Excavation:

1. General: Excavation shall include the removal of any trees, stumps, debris or other obstacles that may obstruct the line of work, and the excavation and removal of all earth, rock or other material to the extent necessary to install the utility and all appurtenances in conformance with the line and grades shown on the plans or as specified herein.

2. Trench Width: The sides of all trenches shall be cut as near vertical as possible. Whenever the prescribed maximum trench width is exceeded for pipe utilities, except as such excess may be required for compliance with plans or specifications, the pipe shall be cradled with 2,000 psi concrete at the expense of the CONTRACTOR. Unless shown or specified otherwise, the maximum and minimum trench widths for the associated utility shall be measured at 12-inches above the top of the utility line and shall be as follows:

   a. Storm sewers:
      1) Minimum width: 16-inches plus O.D. of Pipe
      2) Maximum width: 24-inches plus O.D. of Pipe
   b. Sanitary sewers:
      1) Minimum width: 16-inches plus O.D. of Pipe
      2) Maximum width: 24-inches plus O.D. of Pipe
   c. Water lines:
      1) Minimum width: 16-inches plus O.D. of Pipe
      2) Maximum width: 24-inches plus O.D. of Pipe

d. Gas lines:
   1) Minimum width: 6-inches plus O. D. of Pipe
   2) Maximum width: 12-inches plus O.D. of Pipe

3. Trench Depth: Unless shown or specified otherwise, trenches shall be excavated to a depth such that the following minimum depths of cover are maintained on the associated utility (as measured from final grade):
   a. Water mains: 42-inches of cover.
   b. Gas mains: 3 0-inches of cover. Gas Services: 1-1/4" and smaller: 18-inches of cover.
4. Trench Bottom: Accurately grade trench bottom such that uniform bearing and support is provided for the utility being installed. Trench bottom shall be such that the utility is supported along its entire length by undisturbed soil except where bell holes or depressions are required. When bell holes or depressions are required for the proper installation of a utility, the trench bottom shall be completely graded before the bell hole or depression is excavated. - Bell holes or depressions shall be no larger than required for the proper installation of the utility. The following procedures shall be used when various types of trench subgrades are encountered.
   a. Earth Subgrade: Where a firm and stable foundation for the utility being installed can be obtained in the natural soil and where special embedment is not shown on the plan details of specified herein, the bottom of the trench shall be carefully trimmed to fit the lower portion of the utility line.
   b. Rock Subgrade: Where the bottom of the excavation for the utility line is in rock or other hard material, the rock or other hard material shall be removed to a depth not less than four (4") inches below subgrade and the bottom of the trench brought to true subgrade elevation by filling with Class I embedment or other suitable materials as approved by the ENGINEER. The fill shall be compacted by means of tamping until a firm and uniformly unyielding foundation is established for the utility line being installed.
   c. Soft Subgrade: Where a soft or spongy material is encountered in the excavation at subgrade level, it shall be removed only upon the direction of the ENGINEER. When directed, remove the soft material and replace it with Class I embedment or other suitable materials as approved by the ENGINEER. The fill replacing the soft material shall be compacted by means of tamping and shall be to a depth that will result in a true trench subgrade that provides a firm and uniformly unyielding foundation for the utility being installed.
5. Sheeting, Shoring, and Bracing: Shore all excavations in accordance with OSHA Standards and the applicable section, or sections, of these specifications. When excavations are made adjacent to existing buildings or other structures, or in paved roadways, particular care shall be taken to adequately sheet, shore, and brace the sides of the excavation to prevent undermining of, or the settlement beneath, the structures or pavements. Undermining of adjacent structures or pavement, and the costs associated with it, shall be the responsibility of the CONTRACTOR. All sheeting, shoring, and bracing shall be done in such a manner that will not cause any caving or sliding of banks and will not endanger any human life or damage any existing structures of property. Fill and compact all holes or voids left by the removal. of sheeting, shoring or bracing. No payment will be allowed for such material left in place.

6. Dewatering Excavations: Immediately remove all surface water, ground water or seepage water from sewers, drains, ditches, or other sources which may accumulate in the

excavation during construction. Removal of water shall be done by pumping, bailing, draining, well pointing, or other approved methods. The CONTRACTOR shall have available, at all times, sufficient equipment in proper working order for dewatering excavations. Disposal of all water from excavations shall be in a legal and safe manner. All dewatering of excavations including pumping, bailing, draining, ditching, well pointing, underdrain, etc., is incidental work and will not be paid for separately.

7. Open Cut Excavations: Except where otherwise shown on the plans, all utility installations shall be accomplished by open cut. In all cases where open cuts are allowed through pavements, the methods of construction must meet the requirements of the appropriate regulating agency in all respects including deviations from these specifications or plans. Open cut excavations crossing paved or unpaved public roadways and driveways shall be done such that inconvenience to users is minimized. Repair all open cut pavements in accordance with the plan details or to the original condition, whichever is more stringent. Repair all open cut pavements in a timely fashion. Where a utility line is to be installed across a paved roadway by open cut, the CONTRACTOR, with the approval of the ENGINEER, may elect to install the utility by boring and in such case will be paid for the corresponding pavement repair if provided for in the bid form.
8. Boring, Jacking or Drilling: When shown on the plans, the utility fine shall be installed by boring, jacking or drilling under roadways, streets or railroads, or the line shall be installed in a casing that has been placed by boring, jacking or drilling in accordance with requirements of all regulating agencies.
9. Excavation of Appurtenances: Excavate as required for appurtenances of the utility being installed. For manholes and other similar structures leave at least two (2) feet clear between the outer surfaces and the embankment or timber that may be used to hold or protect the banks. Any over excavating below appurtenances is not allowed. If over excavating of appurtenances occurs, the excavation will be refilled with cement stabilized sand or concrete. The cost for this refilling shall be the responsibility of the CONTRACTOR.
10. Explosives: The use of explosives to aid excavation work is strictly prohibited.

B. Embedment

1. All embedment for utility shall be in accordance with the plan details and shall use the materials outlined in this specification. If the type of embedment material is not shown in the plan details, the embedment material shall be bank sand for water and sewer lines and cement stabilized sand for storm sewers. In general, the embedment zone of a utility line is 4-inches below the bottom of the utility to 12-inches above the top of the utility. All materials for the embedment of a utility being installed shall be placed in layers or lifts that do not exceed 6-inches in thickness. Compaction of embedment zone material shall be in strict accordance with the plan details.

C. Backfill

1. General: The three (3) types of backfill that may be used include: cement stabilized sand, bank sand, common backfill, and flowable fill. Install the various types of backfill material in accordance with and at the locations detailed on the plans. Backfilling shall include the refilling and consolidation of the required fill in trenches and excavations from the top of the embedment zone of the utility being installed to the surrounding ground surface or to the bottom limits of a required pavement repair as detailed on the plans. If the type of backfill material is not shown in the plan details, the backfill material shall be common backfill for non-structural areas (i.e. grassy areas, pasture, etc.) and cement stabilized sand for structural areas (i.e. streets, sidewalks, etc.)

2. Cement Stabilized Sand: Installation of cement stabilized sand backfill shall be in conformance with the applicable paragraphs of SECTION 02240 - Cement Stabilized Sand and shall be installed in accordance with and at the locations shown on the locations shown on the plan details.
3. Bank Sand: Install approved bank sand backfill in accordance with and in the locations shown on the plan details. Place sand backfill in maximum 12-inch loose lifts above the embedment zone and compact each layer to 95% Standard Proctor (ASTM D698).
4. Common Backfill: Unless specified or shown otherwise on the plan details, backfill all trenches with approved common backfill material from the trench excavation. Place common backfill in 8-inch layers above the embedment zone and compact each layer to 92% Standard Proctor (ASTM D698) at 0 to 4% above optimum moisture content.
5. Excess Material: Excavation material unsuitable for backfilling and excess material shall be disposed of in a manner approved by the ENGINEER. Acceptable surplus spoil may be neatly distributed and spread on the right-of-way in open areas or pastures.

3.03 REPAIR/RESTORATION

A. Restore surfaces at construction sites to a condition equal to condition prior to construction.
B. If consolidation occurs during the twelve-month warranty period, the CONTRACTOR shall restore the surface to the original ground elevation prior to consolidation.

3.04 ADJUSTING/CLEANING

A. All premises shall be left in an "as found" condition.

END OF SECTION 02222

This area was intentionally left blank.

SECTION 02229

EXCAVATION SAFETY

PART 1 GENERAL

1.01 SUMMARY

A. This section covers the minimum requirements and responsibilities of the CONTRACTOR for excavations and shoring/safety of same.

1.02 MEASUREMENT AND PAYMENT

A. The cost of performing the safety requirements set forth herein shall be paid for on a linear foot basis according to the depth of cut as set forth on the Bid Form and shall include all labor, materials, services and equipment to perform this item of work.

1.03 REFERENCES

A. The applicable provisions of the following standards shall apply as if written here in their entirety:

1. OSHA - Occupational Safety and Health Administration, 29CFR, Part 1926

1.04 SYSTEM DESCRIPTION

A. The CONTRACTOR shall shore or otherwise protect all excavations from cave-ins, protect employees from exposure to vehicular traffic, falling loads, hazardous atmospheres, water accumulation and unstable structures in and adjacent to excavations and provide acceptable means of access to and egress from excavations. The CONTRACTOR is solely responsible for the safety of his employees and the general public as they interface with a construction project.

1.05 QUALITY ASSURANCE

A. Excavation safety system shall meet the current standards established by OSHA, 29CFR, Part 1926, Subpart P-Excavations.

B. Any construction not in accordance with OSHA regulations will not be eligible for payment and delays in construction to bring the project into OSHA regulations will not be the responsibility of the OWNER or the ENGINEER.

1.06 PROJECT / SITE CONDITIONS

A. CONTRACTOR shall develop and implement an excavation safety program based on the actual conditions encountered on the project.

PART 2 PRODUCTS (Not Used.)

PART 3 EXECUTION

3.01 CONTRACTOR'S RESPONSIBILITY

A. CONTRACTOR has the sole responsibility for providing and adequate excavation safety system. The CONTRACTOR agrees that neither the OWNER nor the ENGINEER has such responsibility and CONTRACTOR shall not rely on the OWNER or the ENGINEER or any of their representatives for inspection, design, supervision, construction or any other aspect of excavation safety.

END OF SECTION 02229

This page was intentionally left blank.

SECTION 02230

FLEXIBLE BASE

PART 1 GENERAL

1.01 SUMMARY

A. This section covers construction of a foundation course for pavement surface course or other base courses. The base shall be composed of crushed stone and shall be constructed in one or more Courses to the lines and grades shown on the plans. All construction procedures and materials shall be in accordance with TxDOT item 247.

1.02 RELATED SECTIONS

A. Section 02223 - Excavation, Backfilling and Compacting for Pavement

1.03 MEASUREMENT AND PAYMENT

A. The accepted materials and work for this item will be measured by the square yard of the compacted in place base material of the thickness shown on the plans or in the Bid Form. The unit price bid for "Flexible Base" shall be full compensation for furnishing all materials; for delivery on the road; for spreading, shaping, compacting, and finishing; and for all manipulations, labor, tools and incidentals necessary to complete the work.

1.04 REFERENCES

A. The applicable provisions of the following standards shall apply as if written here in their entirety:

1. TxDOT - Texas Department of Transportation Standard Specifications for Construction of Highways, Streets and Bridges

1.05 SUBMITTALS

A. Submit certification from supplier or manufacturer that base material meets the requirements of this section.

1.06 QUALITY ASSURANCE

A. Provide samples of flexible base material delivered for incorporation into the project for testing by OWNER. Failed tests shall be paid for by CONTRACTOR.

1.07 DELIVERY, STORAGE, AND HANDLING

A. Handle and store base material to prevent segregation of aggregate.

PART 2 PRODUCTS

2.01 MATERIALS AND/OR EQUIPMENT

A. The Materials will consist of crushed or uncrushed coarse aggregate mixed with any approved binding material necessary to meet the specified requirements.

B. Material Types: Type A shall consist of broken or crushed aggregate. All material used must meet the requirements specified in the test limitations tabulation.

C. Grades: The base material shall consist of Grade 1 or 2, unless specified otherwise on the plans. All grades shall meet the requirements in the specification test limit tabulation, according to standard Texas Department of Transportation Laboratory test procedures. When pilot grading is designated in the plans, the ENGINEER will specify the grading and allowable tolerances to be achieved during production. When necessary, the ENGINEER may vary the pilot grading to insure the base material produced shall meet the physical requirements specified.

D. Physical Requirements For Flexible Base Materials:

TYPES	Grade 1:		Grade 2:	
TYPE A Crushed or Broken Aggregate	Retained on Square Sieve	Percent	Retained on Square Sieve	Percent
	1-3/4"	0	1-3/4"	0 - 10
	7/8"	10 - 35	No. 4	45 - 75
	3/8"	30 - 50	No. 40	60 - 85
	No. 4	45 - 65	Max. LL	40
	No. 40	70 - 85	Max. PI	12
	Max. LL	35	*Max Wet Ball Mill	45
	Max. PI	10		
	*Max Wet Ball Mill	40		

* Unless otherwise shown on plans, the maximum increase in material retained on the No. 40 sieve resulting from the Wet Ball Mill Test shall not exceed 20.

1. Materials with plasticity greater than those specified may be accepted if the PI is lowered by addition of lime. The lime for this purpose shall be furnished at the CONTRACTOR's expense.
2. The ENGINEER may accept the material, providing not more than two (2) out of ten (10) consecutive gradation tests performed are outside of the specified limit on any individual or combination or sieves by no more than five percent (5%) and where no two (2) consecutive tests are outside the specified limits.
3. The ENGINEER may accept the material providing not more than two (2) out of ten (10) consecutive plasticity index samples tested are outside of the specified limit by no more than two (2) points and where no two consecutive tests are outside the specified limits.

E. CONTRACTOR shall supply pneumatic and/or steel wheel rollers of sufficient weight to apply a minimum compression of 325 pounds per linear inch of wheel width. Rolling shall start longitudinally at the sides and proceed toward the center, overlapping on successive trips to provide a uniform final surface of the base. Operate rollers at a speed that optimizes compaction.

2.02 SOURCE QUALITY CONTROL

A. The material shall be secured from the sources approved by the ENGINEER. The pits which the acceptable material to be used shall be taken from, shall be opened up to immediately expose the vertical faces of all the strata and the material shall be secured in successive vertical cuts extending through all exposed strata, unless otherwise directed.

B. Testing:

1. Testing of the flexible base materials shall be in accordance with the following Texas Department of Transportation standard laboratory test procedures.
   a. Constants and Sieve Analysis – Tex-101-E
   b. Liquid Limit - Tex-104-E
   c. Plastic Limit – Tex-105-E
   d. Plasticity Index – Tex-106-E
   e. Sieve Analysis - Tex- 110-E
   f. Wet Ball Mill - Tex- 116-E

2. Job control samples for testing Soil Contents, Gradation and Wet Ball Mill shall be completed prior to the compaction operations, unless otherwise specified.

PART 3 EXECUTION

3.01 PREPARATION

A. The subgrade shall be completed within specification and approved by the ENGINEER prior to placement of the base material.

3.02 ERECTION/INSTALLATION/APPLICATION AND/OR CONSTRUCTION

A. The base material shall be placed in lifts not exceeding 8-inches compacted thickness. The material shall be delivered in uniform capacity on approved vehicles. The CONTRACTOR shall insure that the required amount of the specified material is uniformly placed in each one hundred (100) foot station. The material placed upon the subgrade shall be spread and shaped on the same day, unless it is impractical to do so or otherwise directed by the ENGINEER. If it is impractical to spread the material during the first twenty-four (24) hour period, due to poor weather or an unforeseen circumstance, then the material must be scarified and spread as directed by the ENGINEER. The material shall meet the specified moisture content, and then be manipulated, bladed, rolled and shaped to achieve the sections required on the plans. Areas of segregated coarse and fine material shall be corrected or removed and replaced with well graded material.

B. After the material is spread and shaped, it may be essential or desirable for additional binder material to be added. The additional binder will be furnished and applied as directed by the ENGINEER. The binder material shall be carefully and evenly incorporated with the material in place by scarifying, harrowing, brooming, or other approved methods. The course shall be rolled and sprinkled as required in order to achieve a uniform compaction. The shape of the course shall be maintained by blading, and the surface upon completion shall be smooth and in conformity with the typical sections on plans and to the established lines and grades.

C. The base course shall be kept open for all traffic, unless otherwise directed by the ENGINEER. The surface shall be kept free from irregularities and ruts by sprinkling and blading.

D. Compact flexible base to 95% Modified Proctor density as determined by ASTM D1557. Moisture content shall be 0 to 3% above optimum.

3.03 FIELD QUALITY CONTROL

A. Allow access to completed portions of flexible base for field density testing by nuclear method.

END OF SECTION 02230

This page was intentionally left blank.

SECTION 02240

CEMENT STABILIZED SAND

PART 1 GENERAL

1.01 SUMMARY

A. This section provides for the use of cement stabilized sand as a utility bedding or backfill material or for structural backfill.

1.02 RELATED SECTIONS

A. Section 02222 - Excavation, Trenching, and Backfilling for Utilities

1.03 MEASUREMENT AND PAYMENT

A. There will be no separate measurement and payment for cement stabilized sand unless otherwise shown in the Bid Form.

1.04 REFERENCES

A. The applicable provisions of the following standards shall apply as if written here in their entirety:

1. ASTM - American Society of Testing Materials

1.05 SYSTEM DESCRIPTION

A. Provide sand - cement mixture that will produce a minimum unconfined compressive strength of 50 pounds per square inch in 48 hours and 100 pounds per square inch (psi) in 7 days.

1.06 QUALITY ASSURANCE

A. Upon request of the ENGINEER, the CONTRACTOR or his supplier will furnish samples of the sand and cement for testing before and/or during project construction. Samples shall be submitted two (2) days prior to stabilized sand being delivered to the project site. If the material source is changed during project construction, new samples shall be submitted.

1.07 DELIVERY, STORAGE AND HANDLING

A. Material not in place within three (3) hours of mixing will be rejected.

PART 2 PRODUCTS

2.01 MATERIALS AND/OR EQUIPMENT

A. Sand. Use clean durable sand containing not more than the following:

1. Deleterious Materials:
   a. Clay lumps, ASTM C142; less than 0.5 percent (0.5%).
   b. Lightweight pieces, ASTM C123; less than five percent (5.0%).
   c. Organic impurities, ASTM C40; shall not show a color darker than the standard color.
   d. Other deleterious materials such as coal, shale, coated grains of soft flaky particles; less than two percent (2.0%).
2. Plasticity index shall be four (4) or less when tested in accordance with ASTM D43 and ASTM D424.
3. Color Test ASTM C40. Color not darker than standard color.
4. Gradation Requirements:

3/8-inch sieve	0%	60-mesh sieve	60%- 95%
1/4-inch sieve	0%- 5%	100-mesh sieve	80% -97.5%
10-mesh sieve	5% - 35%	200-mesh sieve	95% - 100%
20-mesh sieve	15% - 55%	270-mesh sieve	100%
40-mesh sieve	35% - 85		

B. Portland Cement: Furnish Portland cement to confirm with ASTM C150, TYPE I.
C. Water: Water shall be reasonably clean, potable, and free from injurious amounts of oil, acid, alkalies, salt, organic matter, or other deleterious material.

PART 3 EXECUTION

3.01 PREPARATION

A. Add not less than 1-1/2 sacks of Portland cement to stabilize one (1) cubic yard of sand mixture. Mix thoroughly in an approved pug-mill type mixer. Stamp batch ticket with the time of loading.

3.02 ERECTION/INSTALLATION/APPLICATION AND/OR CONSTRUCTION

A. Bedding:
   1. Place cement-sand in a trench or excavation prepared for utility pipe to the depth shown on the drawings.
   2. After bedding material is in place, set pipes in position to grade.
   3. Add additional cement-sand material around pipe, filing to depth as shown on the drawings. Place cement-sand material at optimum moisture content, and in layers not to exceed six inches (6") measured loose.
   4. Compacted between 90% to 92% of the wet density determined by laboratory compacted specimen molded in accordance with ASTM D698.
B. Foundations:
   1. Use cement stabilized sand for stabilizing below the foundation for precast manholes, inlets or concrete structures.
   2. Compacted between 90% to 92% of the wet density determined by laboratory compacted specimen molded in accordance with ASTM D698.
C. Backfill:
   1. When required, place cement-sand in utility trenches as backfill for lines under existing or future pavement.
   2. Place cement-sand material at optimum moisture content in layers not to exceed six inches (6"), measured loose.
   3. Compacted between 90% to 92% of the wet density determined by laboratory compacted specimen molded in accordance with ASTM D698.

3.03 FIELD QUALITY CONTROL

A. Allow access to completed portions of bedding or backfill for field density testing by nuclear method.
B. Samples of delivered product will be taken each day of placement at the project site for testing of compressive strength of product.
C. Other tests may be performed on delivered product to determine if the material complies with this specification.

END OF SECTION 02240

SECTION 02270

SLOPE/CHANNEL PROTECTION AND EROSION CONTROL

PART 1 GENERAL

1.01 SUMMARY

A. This section pertains to furnishing all labor, materials, equipment, supervision, and tools for the installation of slope/channel protection and erosion control devices, temporary and permanent. Slope protection consists of stone riprap. Erosion control devices consist of silt fences, turf reinforcement mat and inlet protection bags. Slope protection and erosion control devices shall be install at all locations shown in the Construction Drawings.

1.02 RELATED SECTIONS

A. Section 02210 - Grading

1.03 MEASUREMENT AND PAYMENT

A. Payment will be made at the unit price or lump sum price found in the bid schedule for all labor, materials, equipment, etc. require for the construction of the related slope protection or erosion control device. If there is no unit price or lump sum price in the bid schedule, this section shall be consider incidental and cost shall be incorporated into items in the bid schedule.

1.04 REFERENCES

A. The applicable provisions of the following standards shall apply as if written herein their entirety:
   1. ASTM - American Society for Testing of Materials
   2. TxDOT - Texas Department of Transportation - Standard Specifications for Construction of Highways, Streets and Bridges.

1.05 SYSTEM DESCRIPTION

A. The CONTRACTOR shall provide the materials required to construct the slope protection and/or erosion control devices as show in the Construction Drawings. The CONTRACTOR will be responsible for the maintenance of the slopes and disturbed areas until erosion has ceased.

1.06 SUBMITTALS

A. Submit certification form supplier or manufacturer that the riprap, etc. meets the requirements of this section.

B. Submit catalog data for silt fences, geotextile bags used for inlet protection bags, etc.

1.07 DELIVERY, STORAGE, AND HANDLING

A. Riprap may be stored on-site at location approved by the ENGINEER.

B. Silt fencing, etc. shall be handled and stored in accordance with manufacture's recommendations.

PART 2 PRODUCTS

2.01 MATERIALS AND/OR EQUIPMENT

A. Silt Fencing: Silt fencing shall consist of a filter fabric that is secured in place by wood or steel posts and supported with woven wire.
   1. Fabric: Fabric materials shall meet the requirements of Departmental Materials Specification D-9-6230, "Temporary Sediment Control Fence Fabric".
   2. Posts: Posts shall be a minimum of 44" long, essentially straight, and shall be wood or steel, unless otherwise shown on the plans. Soft wood posts shall be at least 3" in diameter or nominal 2" X 4". Hardwood posts shall have a minimum cross-section of 2"X2". Steel posts shall be "T" or "L" shaped with a minimum weight of 1.3 lbs. per foot.

3. Net Reinforcement: Net reinforcement shall be galvanized welded wire mesh of a minimum 14 gauge wire or equal as approved by the ENGINEER with a maximum opening size of 2"X4".
4. Staples: Staples used to secure reinforcement and fabric to wood posts shall have a crown at least 3/4" wide and legs ½".

B. Turf Reinforcement Mat: The permanent turf reinforcement mat shall be SC250 as manufactured by North American Green, or approved equal.

C. Inlet Protection Bags: Geotextile bags shall be filled with pea gravel, or approved equal. The bag shall have a minimum height of 6 inches with installed.

D. Riprap: The Construction Drawings shows the locations and riprap type to be installed. The requirements for the riprap types are as follows:
1. Type 1: Stones shall not be less than 1/3 of a cubic foot in volume and not less than 3 inches in their least dimension. The width of the stone shall not be less than twice its thickness. Broke concrete may be used upon the approval of the ENGINEER.
2. Type 2: Stones shall weigh between 50 and 250 pounds each, at least 50 percent of the stones shall weigh more than 100 pounds each. Stones shall have typical minimum dimensions of 12 inches by 24 inches by 6 inches.

PART 3 EXECUTION

3.01 PREPARATION

A. Silt Fencing: A path shall be cleared were the proposed silt fencing is to be installed.

B. Riprap: The subgrade shall be prepared so that the line and grade of the finished surface of the riprap will be at the elevations shown in the Construction Drawings.

C. Turf Reinforcement Mat: The area to receive the turf reinforcement shall cut to finish grade.

3.02 ERECTION/INSTALLATION/APPLICATION AND/OR CONSTRUCTION

A. Silt Fencing: The silt fencing shall be install as per the detail in the Construction Drawings.

B. Inlet Protection Bags: The bags shall be placed in front of the inlet in a semicircle. The bags shall be place end to end as to eliminate all gaps.

C. Riprap: All riprap shall be dry place, unless noted otherwise.
1. Type 1: Stones may be place in layers to achieve the desired thickness. Each layer shall be well bedded into the proceeding layer.
2. Type 2: Stones shall be place in a single layer not less than the thickness shown in the Construction Drawings.
3. Voids between the larger stones shall be filled with small stones and spall material so that the stones are tightly wedged. The finished surface shall be reasonably uniform and to the line and grade of the typical section.

D. Turf Reinforcement Mat: The mat shall be installed as per the manufacturer’s requirements.

3.03 REPAIR AND RESTORATION

A. Silt Fencing and Inlet Protection Bags: The CONTRACTOR shall maintain the silt fencing and inlet protection bags until the areas have been stabilized. During the project, the CONTRACTOR shall make any and all repairs to the fence to ensure the sediment is not transported off-site.

B. Riprap: If during construction the riprap has come dislodged, the CONTRACTOR shall repair the riprap so that the riprap will meet the requirements of the section and the Construction Drawings.

END OF SECTION 02270

SECTION 02605

CONDUCTIVE TRACE WIRE FOR NONMETALLIC PIPE

PART 1 GENERAL

1.01 SUMMARY

A. This section covers the requirements for installation of a conductive tracer wire with non-metallic pipe underground.

1.02 MEASUREMENT AND PAYMENT

A. No separate payment will be made for tracer wire or its installation. Include cost for same in the price bid for pipe installation.

1.03 SYSTEM DESCRIPTION

A. Install electrically continuous trace wire with access points as described herein to be used for locating non-metallic pipe with an electronic pipe locator after installation.

PART 2 PRODUCTS

2.01 MATERIAL

A. Trace wire shall be fourteen (14) gauge minimum copper-clad steel wire with a 30 mil high density polyethylene insulation. Tracer wire shall be Copperhead Reinforced Tracer Wire, or approved equal. Wire connectors shall be watertight and provide electrical continuity. Wire connectors shall be 3M DBR, or Copperhead Snake Bite Connectors, or approved equal.

PART 3 EXECUTION

3.01 ERECTION/INSTALLATION/APPLICATION AND/OR CONSTRUCTION

A. When required, tracer wire shall be installed in the same trench and inside bored holes and casing with non-metallic pipe during pipe installation. It shall be secured to the pipe as required to insure that the wire remains adjacent to the pipe, with 6" separation maintained on gas poly piping. The tracer wire shall be securely bonded together at all wire joints with an approved watertight connector to provide electrical continuity, and it shall be accessible at all water valve boxes, water meter boxes, sewer manholes, sewer cleanouts, gas valves and gas meter risers. At manholes, the wire shall be installed from the exterior of the manhole to the interior by installing the wire underneath the manhole frame and cad-welded to manhole frame. For lines with more than 5 feet of cover, the wire shall be installed directly over the pipe at a depth of 5 feet. If the spacing of water valve boxes and water meter boxes is greater than one mile, the tracer wire on water lines shall be looped up in a 2" PVC pipe to be located at the right-of-way fence line or at a cross fence line, as applicable, for protection. A cap shall be placed on the 2" pipe when used, but it shall not be solvent welded onto the pipe. Where access points for trace wire on gas lines exceeds 500', install test lead boxes such that maximum access point spacing is 500'.

3.02 REPAIR/RESTORATION

A. If the wire is not found to be continuous after testing by the OWNER, CONTRACTOR shall repair or replace the failed segment of the wire.

END OF SECTION 02605

This area was intentionally left blank.

SECTION 02610

PIPE, FITTINGS, AND ASSOCIATED APPURTENANCES

PART 1 GENERAL

1.01 SUMMARY

A. This section covers the requirements for pipe, fittings, and associated appurtenances used in water systems.

1.02 RELATED SECTIONS

A. Section 02660 - Supply Lines and Piping

B. Section 02671 - Well Head Appurtenances

1.03 MEASUREMENT AND PAYMENT

A. No separate payment will be made for these items, unless indicated in related sections, bid schedule or construction drawings.

1.04 REFERENCES

A. The applicable provisions of the following standards shall apply as if written here in their entirety:

1. ANSI - American National Standards Institute
2. ASTM - American Society for Testing Materials
3. AWWA - American Water Works Association
4. NSF - National Sanitation Foundation

1.05 SUBMITTALS

A. Submit four (4) copies of shop drawings showing materials being offered, including dimensions and catalog data verifying the products meet the requirements of this section.

1.06 QUALITY ASSURANCE

A. All potable water pipe shall bear the NSF seal of approval for potable water pipe and have an ASTM design pressure of at least 150 psi or a standard dimension ratio of 26 or less. Pipe manufacture shall mark pipe with appropriate ASTM designation.

B. CONTRACTOR shall notify ENGINEER not less than 24 hours before each load of pipe is to be delivered to the job site to allow for inspection. When a load of pipe is found to have inadequate wall thickness or tolerances greater than specified, randomly selected samples of the pipe shall be immediately sent to the National Sanitation Foundation, with instructions to check the pipe for compliance with not only National Sanitation Foundation specifications but other specifications for the specific contract. When the National Sanitation Foundation or other commercial laboratory selected concurs that the pipe does not meet specifications, it shall be immediately removed and replaced by the CONTRACTOR at no additional cost to the OWNER.

1.07 DELIVERY, STORAGE AND HANDLING

A. Comply with pertinent provision of Section 01620.

B. Interiors of pipe and appurtenances shall be kept clean prior to and during construction. Protect PVC pipe and gaskets from excessive exposure to heat and sunlight.

PART 2 PRODUCTS

2.01 MATERIALS AND/OR EQUIPMENT

A. Pipes and related products must conform to American National Standards Institute/National Sanitation Foundation (ANSI/NSF) Standard 61 and must be certified by an organization accredited by ANSI. Pipe shall be domestic origin.

B. PVC Pipe: PVC water lines shall be of the type designated on plans or in the bid form.

1. C-900 PVC: C-900 PVC water line shall meet the requirements of AWWA C-900 (latest revision), "Polyvinyl Chloride (PVC) Pressure Pipe, 4 in. through 12 in., for Water" and

shall be approved by the State Board of Insurance and Underwriters Laboratories for fire service without penalty. All Class 235 pipe shall meet the requirements of DR 18 and Class 305 pipe shall meet the requirements of DR14. Pipe shall bear the NSF seal of approval indicating that the pipe is suitable for conveying potable water.

2. Joints: Pipe joints shall be push-on type with one elastomeric gasket, or coupling type with two elastomeric gaskets furnished with each coupling. Joints and gaskets shall conform to AWWA C-900. Restrained joints shall be "Certa-Lok" C900/RJ as manufactured by CertainTeed Corporation, or approved equal.
3. Fittings
   a. Full Body: Unless otherwise shown on Plans, fittings shall be ductile iron mechanical joint type. Mechanical joint ductile iron short body fittings shall conform to ANSI/AWWA C110/A21.10 and ANSI/AWWA C111/A21.11. Class250 for 4" through 12" and Class 150 for 14" and larger unless otherwise shown on plans.
   b. Fittings-Short Body: Unless otherwise shown on plans, ductile iron short body fittings may be used and shall be mechanical joint type. Push on and mechanical joint ductile iron short body fittings shall conform to ANSI/AWWA C153/A21.53 and ANSI/AWWA C 111/21.11, class 350 for all sizes.
   c. If shown in the plans, fittings for restrained joint PVC shall be "Certa-Lok" fittings as manufactured by CertainTeed Corporation, or approved equal. The PVC fittings shall be constructed of the same material as the PVC main.
4. Coating, Lining and Encasement for Cast Iron and Ductile Iron Fittings: Fittings shall be asphalt coated outside in accordance with ANSI/AWWA C 151/A21.51, have cement mortar lining inside in accordance with ANSI/AWWA C 104/A21.4, and shall be wrapped with 8 mil low density polyethylene or 4 mil high density polyethylene in accordance with ANSI/AWWA C105/21.5.

C. PVC Pressure Pipe: PVC pressure pipe shall meet the requirements of ASTM D2241 "Specification for Polyvinyl Chloride (PVC) Plastic Pipe (SDR-PR)" and shall bear the NSF seal of approval indicating that the pipe is suitable for conveying potable water. The following standards shall also apply to the installation of PVC pressure pipe:
   1. Joints:
      a. Unless otherwise shown on Plans, pipe joints shall be push-on type conforming to ASTM D-3139, "Standard Specification for Plastic Pressure Pipe using Flexible Elastomeric Seals."
      b. Solvent weld joints shall meet the requirements of ASTM 2672, Standard Specifications for Bell End Polyvinyl Chloride (PVC) Pipe.
      c. Restrained Joints: Restrained joints shall be "Certa-Lok" C900/RJ as manufactured by CertainTeed Corporation, or approved equal.
      d. Gaskets: ASTM F-477, "Standard Specifications for Elastomeric Seals (Gaskets) for Joining Plastic Pipe."
   2. Fittings for 4" and larger pipe shall be cast or ductile iron meeting ANSI/AWWA C110/A21-10. PVC fittings shall be Class 200 minimum rubber gasket type. For special applications with approval of ENGINEER, solvent weld PVC fittings may be used for pipe size 3 " and smaller. If shown in the plans, fittings for restrained joint PVC shall be "Certa-Lok" fittings as manufactured by CertainTeed Corporation, or approved equal. The PVC fittings shall be constructed of the same material as the PVC main.
   3. PVC Material: ASTM D1784, "Standard Specification for Rigid Polyvinyl Chloride (PVC) Compounds and Chlorinated Polyvinyl Chloride (CPVC) Compounds."

D. Ductile Iron Pipe: Unless otherwise shown on the Plans, ductile iron pipe shall be pressure Class 350 in accordance with ANSI/AWWA C 151/A21.51.

1. Joints: Unless otherwise shown on the Plans, pipe joints shall be push-on type conforming to ANSI/AWWAC111/A21.11. Mechanical joint pipe shall conform to ANSI/AWWA C 111 /A21.11 and flanged joint pipe shall conform to ANSI/AWWA C 115/A21.15.
2. Fittings-Full Body: Unless otherwise shown on the Plans, fittings shall be cast iron or ductile iron mechanical joint type. Mechanical joint and push-on fittings shall conform to ANSI/AWWA C 110/A21.10 and ANSI/AWWA C 111/A21.11, Class 250 for 4" through 12" and Class 150 for 14" and larger unless shown otherwise on Plans. Flanged fittings to be in accordance with ANSI/AWWA C 110/A21.10 and ANSI/AWWA C111/A21.11, Class 250 for 4" through 12" and Class 150 for 14" and larger unless otherwise on plans, both with one hundred twenty-five (125) pound template flanges.
3. Fittings-Short Body: Unless otherwise shown on Plans, ductile iron short body fitting may be used and shall be mechanical joint type. Mechanical joint and push-on ductile iron short body fittings shall conform to ANSI/AWWA C153/A21.53 and ANSI/AWWA C111/A21.11 ,Class 350 for all sizes. Flanged fittings shall have full body dimensions.
4. Coating, Lining and Encasement for Pipe and Fittings: Pipe and fittings shall be asphalt coated outside in accordance with ANSI/AWWA C 151/A21.51 except for above ground pipe and fittings which are to be painted. Pipe and fittings shall have cement mortar lining inside in accordance to ANSI/AWWA C104/A21.4. Underground pipe and fittings shall be wrapped with 8 mil low density polyethylene or 4 mil high density polyethylene in accordance with ANSI/AWWA C 105/A21.5.
5. Gaskets: Gaskets for push-on and mechanical joints shall conform to ANSI/AWWA C 111/A21.11. Gaskets for flanged joints shall be 1/8 inch thick rubber, either ring or full face, conforming to dimensions in Appendix to ANSI/AWWA C 115/A21.15.

E. HDPE Pipe: HDPE water line shall meet the requirements of AWWA C-906 (latest revision), "Polyethylene Pressure Pipe and Fittings, 4 in. through 63 in., for Water Distribution and Transmission." Pipe shall be manufactured from a PE 3408 resin listed with the Plastic Pipe Institute (PPI) as TR-4. The resin material shall meet the specifications of ASTM D3350-02 with a minimum cell classification of PE334434C. Pipe O.D. sizes 4” to 24” shall be available in both steel pipe sizes (IPS) and ductile iron pipe sizes (DIPS). Pipe O.D. sizes 26” to 54” shall be available in steel pipe sizes (IPS). Pipe shall have a manufacturing standard of ASTM D3035. All HDPE pipe designated in the construction drawing as Class 160 pipe shall meet the requirements of DR 11 and Class 200 pipe shall meet the requirements of DR 9. The pipe shall contain no recycled compounds except that generated in the manufacturer's own plant from resin of the same specification from the same raw material. The pipe shall be homogeneous throughout and free of visible cracks, holes, foreign inclusions, voids, or other injurious defects.

1. Joints:
   a. Butt Fusion: Sections of polyethylene pipe should be joined into continuous lengths on the jobsite above ground. The joining method shall be the butt fusion method and shall be performed in strict accordance with the pipe manufacturer's recommendations. The butt fusion equipment used in the joining procedures should be capable of meeting all conditions recommended by the pipe manufacturer, including, but not limited to, temperature requirements of 400 degrees Fahrenheit, alignment, and an interfacial fusion pressure of 75 PSI. The butt fusion joining will produce a joint weld strength equal to or greater than the tensile strength of the pipe itself. All field welds shall be made with fusion equipment equipped with a data logger. Temperature , fusion pressure and a graphic representation of the fusion cycle shall be part of the quality control records.

b. Sidewall Fusion: Sidewall fusions for connections to outlet piping shall be performed in accordance with HDPE pipe and fitting manufacturer's specifications. The heating irons used for sidewall fusion shall have an inside diameter equal to the outside diameter of the HDPE pipe being fused. The size of the heating iron shall be ¼ inch larger than the size of the outlet branch being fused.

c. Mechanical: Bolted joining may be used where the butt fusion method cannot be used. Flange joining will be accomplished by using a HDPE flange adapter with a ductile iron back-up ring. Mechanical joint joining will be accomplished using either a molded mechanical joint adapter or the combination of a Sur-Grip Restrainer and Pipe Stiffener as manufactured by JCM Industries, Inc., or approved equal. Either mechanical joint joining method will have a ductile iron mechanical joint gland.

d. Other: Socket fusion, hot gas fusion, threading, solvents, and epoxies may not be used to join HDPE pipe.

2. Fittings:

a. Butt Fusion Fittings: Butt fusion fittings shall be in accordance with ASTM D3261 and shall be manufactured by injection molding, a combination of extrusion and machining, or fabricated from HDPE pipe conforming to this specification. All fittings shall be pressure rated to provide a working pressure rating no less than that of the pipe. Fabricated fittings shall be manufactured using a data logger to record fusion pressure and temperature. A graphic representation of the temperature and pressure data for all fusion joints made producing fittings shall be maintained as part of the quality control. The fitting shall be homogeneous throughout and free of visible cracks, holes, foreign inclusions, voids, or other injurious defects.

b. Electrofusion Fittings: Electrofusion Fittings shall be PE3408 HDPE, Cell Classification of 345464C as determined by ASTM D3350-02 and be the same base resin as the pipe. Electrofusion Fittings shall have a manufacturing standard of ASTM F1055.

c. Flanged and Mechanical Joint Adapters: Flanged and Mechanical Joint Adapters shall be PE 3408 HDPE, Cell Classification of 345464C as determined by ASTM D3350-02 and be the same base resin as the pipe. Flanged and mechanical joint adapters shall have a manufacturing standard of ASTM D3216. All adapters shall be pressure rated to provide a working pressure rating no less than that of the pipe.

F. Steel Pipe: Steel pipe, 6 inches in diameter and larger shall be Grade "A", seamless pipe conforming to AWWA C200 and shall have a minimum wall thickness as shown on the plans

1. Joints: Unless otherwise shown on Plans, joints shall be butt welded field joints in accordance with AWWA C206. All welders assigned to apply metal arc welding to pipe joints under this specification shall have been tested under the American Welding Society "Standard Qualifications Procedures." The CONTRACTOR shall provide copies of certificates showing that all welders are qualified under the above standards.
2. Fittings: Steel flanges and fittings shall conform to AWWA C207 and C208.
3. Coating and Lining for Pipe and Fittings: All interior and exterior surfaces of pipe and fittings shall receive shop applied coatings of Coal Tar Epoxy conforming to the requirements of AWWA C120. Weld joints and damaged coating shall be field repaired using materials and procedures recommended by the manufacturer of the coating used on the pipe.
4. Holiday Detection: Prior to installation, the coated pipe and fittings shall be holiday detected with a wet sponge holiday detector and all holidays shall be repaired in accordance with the requirements of AWWA C210.

G. Copper Tubing: Copper tubing shall conform to the requirements of ASTM B-88, Type "K".

Joints for underground work shall be compression-pattern, flared, for soft copper tubing and shall be made with fittings meeting approved standards. Tubing shall be cut off square and expanded with a proper flaring tool.

H. Polybutylene Pipe: Where shown on the drawing, the polybutylene piping shall be SDR-9, Class 40.

I. Tapping Sleeves: Tapping sleeves shall be stainless steel body with ductile iron flange, 200 psi working pressure with 125 pound outlet flange, Smith-Blair, Ford, or approved equal.

J. Service Fittings: Tapping saddles, corporation stops and curb stops shall conform to AWWA C800. Fittings shall be Smith-Blair, Ford, or approved equal.

K. Joint Restraints: The joint restraint shall be installed on all connections to the fitting. Joint Restraints shall be as follows, or approved equal:

Pipe Material	**Size**	**EBAA Iron Series (or approved equal)**
PVC	4" - 36"	2000PV
Ductile Iron	3" - 36"	1100
HDPE (Pipe mfg. shall provided internal pipe stiffener.)	4" - 12"	2000PV

L. Harness Restraints: Harness restraints shall also be installed on bell and spigot pipe joints located within certain specified distances from fittings where indicated in the construction standard drawings. Harness restraints shall be as follows, or approved equal:

Pipe Material	**Size**	**EBAA Iron Series (or approved equal)**
PVC	2" - 12"	6500
PVC AWWA C-905	14" - 36"	2800
Ductile Iron	3" - 36"	1700

M. Flange Adaptors and Pipe Unions:

1. In exposed piping arrangements, including pump stations, treatment facilities, and similar installations, pipe runs into and out-of each major component shall include flange adaptors (for flanged piping) or pipe unions (for screwed piping) sufficient to allow easy disassembly of the pipe-run and removal of the major component.
2. Flange adaptors shall be of ductile iron, with high strength corrosion resistant bolts and wedge-type rubber gasket. Adaptors shall be designed with independent bolting of the flange end from the compression end, to allow flexibility to absorb pipe offsets or deflection and to allow for linear pipe movement due to expansion or contraction. Flange adaptors shall be EBAA Iron, Series 1000, E-Z Flange, or approved equal.
3. Pipe unions shall be 3-piece construction. Materials of construction for unions on copper lines shall be brass; on cast, ductile iron or galvanized steel pipelines shall be galvanized steel; and on PVC pipelines, shall be PVC. 1-1/2" and smaller unions may be of the

compression type, or threaded; 2" and larger shall be threaded. Flanged fittings used for underground service may also be connected to plain-end pipe where necessary with a flanged adaptor as described herein.

N. Expansion Joints: Expansion joints shall be constructed of Buna-N, have a standard working pressure of 140 p.s.i for sizes 6" to 12" and 65 p.s.i. for 14" to 24" sizes and for high pressure applications a pressure rating of 190 p.s.i. for 6" to 12" sizes and 100 p.s.i. for 14" to 24" sizes. Unless noted in the plans, all expansion joints shall be manufactured by Red Valve Company, Inc. and shall be a J-1 series, single arch expansion joint, or approved equal.

PART 3 EXECUTION

3.01 ERECTION/INSTALLATION/APPLICATION AND/OR CONSTRUCTION

A. Refer to related section.

B. Install each component as per manufacturer's recommendations.

3.02 REPAIR/RESTORATION

A. If inspection finds that items under this section do not meet the specifications above, the CONTRACTOR shall replace those items found to be deficient at no cost to the OWNER.

B. Refer to related section.

END OF SECTION 02610

This area was intentionally left blank.

SECTION 02640

VALVES, GAUGES, AND RELATED APPURTENANCES

PART 1 GENERAL

1.01 SUMMARY

A. This section covers the requirements for valves and cocks used in water and wastewater systems.

1.02 RELATED SECTIONS

A. Section 02660 - Supply Lines and Piping
B. Section 02671 - Well Head Appurtenances
C. Section 13211 - Hydropneumatic Pressure Tank

1.03 MEASUREMENT AND PAYMENT

A. No separate payment will be made for these items, unless indicated in related sections, bid schedule or construction drawings.

1.04 REFERENCES

A. The applicable provisions of the following standards shall apply as if written here in their entirety:
   1. ANSI - American National Standards Institute
   2. ASTM - American Society for Testing Materials
   3. AWWA - American Water Works Association
   4. NSF - National Sanitation Foundation

1.05 SUBMITTALS

A. Submit four (4) copies of shop drawings showing materials being offered, including dimensions and catalog data verifying the products meet the requirements of this section.

1.06 QUALITY ASSURANCE

A. CONTRACTOR shall notify ENGINEER when items under this section have been delivered to the job site to allow for inspection. When items are found that do not meet the requirements in this section, such items shall be immediately removed and replaced by the CONTRACTOR at no additional cost to the OWNER.

1.07 DELIVERY, STORAGE AND HANDLING

A. Comply with pertinent provision of Section 01620.

PART 2 PRODUCTS

2.01 MATERIALS AND/OR EQUIPMENT

A. Valves and Related Appurtenances:
   1. Gate Valves: Gate valves 2 inches and larger shall be iron-body, resilient rubber seat, non-rising stem and shall conform to AWWA C-509. Smaller valves shall be brass ball valves with 2" square adapter nut. Valves shall have a clear waterway equal to the full nominal diameter of the valve and shall be opened by turning counterclockwise. The operating nut or wheel shall have an arrow cast in the metal indicating the direction of opening. Valves located inside structures shall be wheel operated and underground valves shall be nut operated. Each valve shall have the maker's initials, pressure rating, and year of manufacture cast on the body. Valves 3 inches through 12 inches shall have a 200 p.s.i. working pressure. Valves shall be "Mueller", or approved equal. For HDPE pipe, valves shall be “Mueller-AquaGrip” or approved equal
   2. Butterfly Valves: Butterfly valves shall be cast iron body, rubber-seated, short body, pressure Class 150 meeting the requirements of AWWA C-504. Valves shall be "Mueller", or approved equal.
   3. Plug Valves: Plug valves shall be manufactured by Dezurik or approved equal. Coatings

for plug valves shall be same as for the pipe.

4. Swing Check Valves: Unless otherwise shown in the construction drawings, check valves 2 inches in diameter and larger shall be iron body, bronze mounted, horizontal swing check valves with balanced weight and lever arm. Check valves shall have a 150 psi working pressure and meet the requirements of AWWA C-508. Valves shall be "Val-Matic", "Apco", or approved equal.
5. Wafer Style Check Valves: Unless otherwise shown on Plans, check valves 2 inches in diameter and larger shall be cast iron body, bronze seat and plug, and stainless steel spring. Check valves shall have a 150 psi working pressure and meet the requirements of AWWA C-508. Valves shall be "Val-Matic", "Apco", or approved equal.
6. Shear Gates: Shear gates shall be all iron, Clow No. F-3000; Neenah Foundry Company, R-5005 Series; Olympic shear gate; or approved equal. Shear gates shall have lifting handle extension where required.
7. Miscellaneous Valves: Flush, blow-off, air relief, and pressure regulating valves shall be of the types and sizes and at the locations shown on the plans.
8. Fire Hydrants: Fire hydrants shall be dry barrel, compression type, 150 psi working pressure, traffic model, with 5-1/4" valve opening and shall meet the requirements of AWWA C-502. Rotate fire hydrant barrel to face direction directed by ENGINEER. Fire hydrants shall be "Mueller", or approved equal.
9. Valve Boxes: Valves buried underground shall be provided with adjustable cast iron valve boxes of proper dimensions to fit over the valve and to extend to finished grade or slightly above as directed by ENGINEER. Valve boxes to have lids cast with the word "Water" with a concrete pad around valve boxes with nipple for tracer wire.

B. Gauges and Related Appurtenances:

1. Pressure Gauges: Pressure and vacuum gauges shall be the size indicated in the construction drawings, liquid filled. Where the pressure gauge is specified to read in feet, it shall be calibrated at no more than 2 foot intervals. Where the pressure gauge is specified to read in pounds, it shall be calibrated at no more than 1 psi intervals. Vacuum gauges shall be specified in inches of water. Gauge case shall be steel, with a glass face. Numbers shall be black, on a white background.
2. Pressure Snubbers: Pressure snubbers (pulsation dampeners) shall be installed in the connecting tubing ahead of all pressure gauges, pressure switches or pressure sensing or recording equipment. The device may be of the interchangeable needle type with a minimum of 3 different needles; or may be of the box-head-screw adjustable type incorporating a ball-check cut-off and an adjustable fine thread choke valve. The snubber shall be bronze.

PART 3 EXECUTION

3.01 ERECTION/INSTALLATION/APPLICATION AND/OR CONSTRUCTION

A. Refer to related section.

3.02 REPAIR/RESTORATION

A. If inspection finds that items under this section do not meet the specifications above, the CONTRACTOR shall replace those items found to be deficient at no cost to the OWNER.

B. Refer to related section

END OF SECTION 02640

SECTION 02660

WATER SUPPLY LINES AND PIPING

PART 1 GENERAL

1.01 SUMMARY

A. This section covers furnishing all labor, materials, equipment, supplies, supervision and tools and performing all operations in connection with the installation of water supply lines, couplings and fittings of the types and pressure classes as shown on the plans or in the bid form.

1.02 RELATED SECTIONS

A. Section 02222 - Excavation, Trenching and Backfilling for Utilities
B. Section 02605 - Conductive Tracer Wire for Non-Metallic Pipe
C. Section 02610 - Pipe, Fittings, and Associated Appurtenances
D. Section 02676 - Hydrostatic Testing of Water Lines
E. Section 02675 - Sterilization of Water Lines

1.03 MEASUREMENT AND PAYMENT

Unless otherwise indicated in the bid form, all materials specified herein shall be measured and paid for as follows:

A. Pipe: Measure and pay for by linear foot from centerline of fitting to centerline of fitting along pipe of size and type installed. All trenching, bedding, backfill and concrete blocking shall be included in the unit price bid per linear foot of pipe. Pipe installed in casing by boring, or in casing by open cut will be measured by linear foot and paid for at the unit price bid for those items.
B. Fittings: Ductile iron and cast iron fittings, excluding tees in fire hydrant units, will be measured by the ton and paid for at the unit price bid per ton. Concrete thrust blocking and joint restraints at fittings shall be included in the bid price per ton.
C. Valves: Valves with valve boxes and concrete collars and valve markers will be measured per each, excluding valves in fire hydrant units, for each size furnished and installed and will be paid for at the unit price bid per each.
D. Fire Hydrant Unit: Fire hydrant units, including tee, lead, valve, valve box and fire hydrant will be measured per each and paid for at the unit price bid per each.
E. Flush Valve Unit: Flush valve unit, including tee or saddle, valve, riser, valve box with concrete collar and valve marker will be measured per each and paid for at the unit price bid per each.
F. Miscellaneous Valves: Measure miscellaneous valves with valve boxes and concrete collars furnished and installed as shown on Plans per each and pay for each at the unit price bid.
G. Water Meters: Measure water meters including meter boxes per each and pay for meters at the unit price bid per each.
H. Water Services: Measure and pay for water service per each. A water service consists of taping saddle on water main, corporation stop, 10 linear feet of service line, and a curb stop connected to water meter according to plans. Additional service line over 10 linear feet will be measured and paid for by the linear foot.
I. Insulation: There will be no separate pay for insulation.

1.04 REFERENCES

A. The applicable provisions of the following standards shall apply as if written here in their entirety:
   1. ANSI - American National Standards Institute
   2. ASTM - American Society for Testing Materials
   3. AWWA - American Water Works Association

4. NSF - National Sanitation Foundation

1.05 SUBMITTALS

A. Submit four (4) copies of shop drawings showing materials being offered, including dimensions and catalog data verifying the products meet the requirements of this section.

1.06 QUALITY ASSURANCE

A. Pipe shall bear the NSF seal of approval for potable water pipe. Pipe manufacture shall mark pipe with appropriate ASTM designation.

B. CONTRACTOR shall notify ENGINEER not less than 24 hours before each load of pipe is to be delivered to the job site to allow for inspection. When a load of pipe is found to have inadequate wall thickness or tolerances greater than specified, randomly selected samples of the pipe shall be immediately sent to the National Sanitation Foundation, with instructions to check the pipe for compliance with not only National Sanitation Foundation specifications but other specifications for the specific contract. When the National Sanitation Foundation or other commercial laboratory selected concurs that the pipe does not meet specifications, it shall be immediately removed and replaced by the CONTRACTOR at no additional cost to the OWNER.

1.07 DELIVERY, STORAGE AND HANDLING

A. Comply with pertinent provision of Section 01620.

PART 2 PRODUCTS

2.01 MATERIALS AND/OR EQUIPMENT

A. Refer to Section 02610 - Pipe, Fittings and Associated Appurtenances

B. Refer to Section 02640 - Valves, Gauges, and Related Appurtenances

C. Water Meters: Water meters 5/8" through 2" shall be sealed register, displacement type and conform to AWWA C-700. Turbine meters shall conform to AWWA C-701. Compound meters 2" and 6" shall conform to AWWA C-702. Propeller meters shall be as indicated on the construction drawings. Meter size and type shall be as shown on the plans.

PART 3 EXECUTION

3.01 PREPARATION

A. Expose all underground utilities which may be in conflict with proposed water lines prior to installing new lines.

3.02 ERECTIONS/INSTALLATION/APPLICATION AND/OR CONSTRUCTION

A. General: All pipe shall have a cover of at least 42 inches unless otherwise shown on Plans. No pipe shall be laid in water or when trench condition or weather is unsuitable for such work and pipe shall be kept clean before, during and after laying. Sanitary precautions shall be taken during water line installation as called for by AWWA standards. Do not install pipe with radius or curvature less than minimum recommended by pipe manufacturer.

1. PVC Pipe: PVC pipe shall be uniformly and continuously supported by stable soil. Bedding in the pipe -zone from 4 inches below bottom of pipe up to 12 inches above top of pipe shall be hand placed select material free from rocks, organic refuse, or lumps greater than1-1/2 inches, which will not break down readily when compacted. Bedding shall be placed in thin (approximately 4-inch) layers, moistened if necessary, and thoroughly compacted under and on each side of the pipe to provide support that is free from voids. The balance of the ditch may be machine backfilled unless otherwise shown on the plans.

2. Ductile Iron and Steel Pipe: Lay pipe on firm earth foundation and carefully backfill to 6" over pipe with acceptable material free from clods, rocks, or other sharp debris which may damage protective coating or cause pipe to shift. The balance of the trench may be

machine backfilled unless otherwise shown on plans.

3. Valves, Valve Boxes and Fire Hydrants: Install valves, valves boxes and fire hydrants plumb. Place valve boxes directly over valve stem. Before installation of valves or fire hydrants, clean all foreign material from interior and open and close valves to insure that they are in good working order. Hand tamp backfill around valve boxes and fire hydrants out to undisturbed trench face.

B. Conductive Tracer Wire: Install conductive trace wire in compliance with Section 2605-Conductive Tracer Wire for Non-metallic Pipe with all main waterlines and services.

C. Separation of Water and Sewer Lines:

1. When water mains and sanitary sewers are installed, they shall be installed no closer to each other than nine feet in all directions and parallel lines must be installed in separate trenches. Where the nine foot separation distance cannot be achieved, the guide lines in this subsection shall apply. The following criteria shall be followed for water and sewer line separations:

a. New water line installation:

1) Where a new potable waterline parallels an existing, non-pressure or pressure rated wastewater main or lateral and the licensed professional engineer licensed in the State of Texas is able to determine that the existing wastewater main or lateral is not leaking, the new potable waterline shall be located at least two feet above the existing wastewater main or lateral, measured vertically, and at least four feet away, measured horizontally, from the existing wastewater main or lateral. Every effort shall be exerted not to disturb the bedding and backfill of the existing wastewater main or lateral. Should excavation for the water line produce evidence that the sewer is leaking, then the sewer must be repaired or replaced as directed by the ENGINEER.

2) Where a new potable waterline parallels an existing pressure rated wastewater main or lateral and it cannot be determined by the licensed professional engineer if the existing line is leaking, the existing wastewater main or lateral shall be replaced with at least 150 psi pressure rated pipe. The new potable waterline shall be located at least two feet above the new wastewater line, measured vertically, and at least four feet away, measured horizontally, from the replaced wastewater main or lateral.

3) Where a new potable waterline parallels a new wastewater main, the wastewater main or lateral shall be constructed of at least 150 psi pressure rated pipe. The new potable waterline shall be located at least two feet above the wastewater main or lateral, measured vertically, and at least four feet away, measured horizontally, from the wastewater main or lateral.

4) Where a new potable waterline crosses an existing, non-pressure rated wastewater main or lateral, one segment of the waterline pipe shall be centered over the wastewater main or lateral such that the joints of the waterline pipe are equidistant and at least nine feet horizontally from the centerline of the wastewater main or lateral. The potable waterline shall be at least two feet above the wastewater main or lateral. Whenever possible, the crossing shall be centered between the joints of the wastewater main or lateral. If the existing wastewater main or lateral is disturbed or shows signs of leaking, it shall be replaced for at least nine feet in both directions (18 feet total) with at least 150 psi pressure rated pipe.

5) Where a new potable waterline crosses an existing, pressure rated wastewater main or lateral, one segment of the waterline pipe shall be centered over the

wastewater main or lateral such that the joints of the waterline pipe are equidistant and at least nine feet horizontally from the centerline of the wastewater main or lateral. The potable waterline shall be at least six inches above the wastewater main or lateral. Whenever possible, the crossing shall be centered between the joints of the wastewater main or lateral. If the existing wastewater main or lateral shows signs of leaking, it shall be replaced for at least nine feet in both directions (18 feet total) with at least 150 psi pressure rated pipe.

6) Where a new potable waterline crosses a new, non-pressure rated wastewater main or lateral and the standard pipe segment length of the wastewater main or lateral is at least 18 feet, one segment of the waterline pipe shall be centered over the wastewater main or lateral such that the joints of the waterline pipe are equidistant and at least nine feet horizontally from the centerline of the wastewater main or lateral. The potable waterline shall be at least two feet above the wastewater main or lateral. Whenever possible, the crossing shall be centered between the joints of the wastewater main or lateral. The wastewater pipe shall have a minimum pipe stiffness of 115 psi at 5.0% deflection. The wastewater main or lateral shall be embedded in cement stabilized sand (see clause (vi) of this subparagraph) for the total length of one pipe segment plus 12 inches beyond the joint on each end.

7) Where a new potable waterline crosses a new, non-pressure rated wastewater main or lateral and a standard length of the wastewater pipe is less than 18 feet in length, the potable water pipe segment shall be centered over the wastewater line. The materials and method of installation shall conform with one of the following options:

   a) Within nine feet horizontally of either side of the waterline, the wastewater pipe and joints shall be constructed with pipe material having a minimum pressure rating of at least 150 psi. An absolute minimum vertical separation distance of two feet shall be provided. The wastewater main or lateral shall be located below the waterline.

   b) All sections of wastewater main or lateral within nine feet horizontally of the waterline shall be encased in an 18-foot (or longer) section of pipe. Flexible encasing pipe shall have a minimum pipe stiffness of 115 psi at 5.0% deflection. The encasing pipe shall be centered on the waterline and shall be at least two nominal pipe diameters larger than the wastewater main or lateral. The space around the carrier pipe shall be supported at five-foot (or less) intervals with spacers or be filled to the springline with washed sand. Each end of the casing shall be sealed with watertight non-shrink cement grout or a manufactured watertight seal. An absolute minimum separation distance of six inches between the encasement pipe and the waterline shall be provided. The wastewater line shall be located below the waterline.

8) Fire hydrants shall not be installed within nine feet vertically or horizontally of any sanitary sewer regardless of construction.

D. Thrust Blocking and Joint Restraint: Concrete blocking and joint restraints shall be installed at all bends, tees, points where reducers or changes in pipe diameter occur, fire hydrants or valves and all plugged openings. Use concrete having compressive strength not less than 2,000 p.s.i. Place blocking against undisturbed solid ground, with area of bearing on pipe and on ground as required by manufacturer's recommendation for the type of soil encountered. Place blocking so that pipe and fitting joints will be accessible for repair. See detail sheet for minimum sizing.

E. Insulation System: All exposed piping less than 4"∅ shall be insulated to a point 24" below finished grade. Insulation shall consist of preformed one-piece fibreglass pipe insulation, with "hinged" construction for easy installation. The insulation shall have a "k" factor of 0.25 or less, at 75ºF mean temperature. It shall be printed on the outside with the pipe size and wall thickness and shall be 2" thick or greater. It shall be rated for a maximum service temperature in excess of 500ºF. It shall be resistant to fungi and bacteria and shall not be adversely affected by moisture absorption. Insulation shall be Manville Corporation "MICRO-LOK", or approved equal. The exterior aluminum roll jacketing shall be manufactured from alloys conforming to ASTM B-209. Jacketing may be provided either smooth finish or corrugated, at the CONTRACTOR'S option. Aluminum roll jacketing shall be as manufactured by Childers Products Company, 35555 Curtis Blvd., East Lake, Ohio, or approved equal. Plastic sheet type weather-proof coverings will not be acceptable.

3.03 REPAIR/RESTORATION

A. Sections of water line determined to be defective either prior to or during hydrostatic pressure test shall be replaced with sound materials at no expense to the OWNER. No repair clamps will be allowed on new construction.

3.04 FIELD QUALITY CONTROL

A. The CONTRACTOR shall notify the and the water system provider 24-hours prior to all testing activities.

B. Prior to final acceptance, hydrostatic pressure test and sterilize water lines according to the applicable sections.

3.05 ADJUSTING/ CLEANING

A. Adjust all fire hydrants, valve boxes and meter boxes to proposed or existing grade as applicable. Upon completion of water line construction, all debris and surplus materials resulting from the work shall be removed from the project site.

END OF SECTION 02660

This page was intentionally left blank.

SECTION 02675

STERILIZATION OF WATER LINES

PART 1 GENERAL

1.01 SUMMARY

A. This section covers the procedures for sterilization of water lines and appurtenances as per AWWA C651-92.

1.02 RELATED SECTIONS

A. Section 02660 - Water Supply Lines and Piping

B. Section 02677 - Hydrostatic Testing of Water Lines

1.03 MEASUREMENT AND PAYMENT

A. There will be no separate payment for sterilization of water lines.

1.04 REFERENCES

A. The applicable provisions of the following standards shall apply as if written here in their entirety:

1. AWWA - American Water Works Association

1.05 SYSTEM DESCRIPTION

A. Furnish pump, pipe connections, gauges, meters, appurtenances and chlorinating agent to sterilize water lines and make bacteriological analysis to check effectiveness.

1.06 STORAGE AND HANDLING

A. Store chlorinating agent in a safe place according to manufacturer's recommendation.

1.07 SCHEDULING

A. Perform final flushing and bacteriological test after successful hydrostatic test of line segment(s).

PART 2 PRODUCTS

2.01 MATERIALS AND/OR EQUIPMENT

A. Chlorinating agent to be liquid chlorine, sodium hypochlorite solution or calcium hypochlorite granules or tablets.

PART 3 EXECUTION

3.01 PREPARATION

A. Remove, by flushing or other means, contaminating materials that may have entered the water line during construction. Where necessary, install temporary flush valves at the end of new lines for flushing and sampling prior to tying into existing system.

3.02 ERECTION/INSTALLATION/APPLICATION AND/OR CONSTRUCTION

A. Application Procedure: Apply chlorinating agent by one of the following procedures:

1. Tablet Method: Place calcium hypochlorite granules or tablets in the water line at the upstream end of the first section of pipe, at the upstream end of each branch and at 500 foot intervals such that when the pipe is filled with potable water the dose will be a minimum of 25 mg/l for 24 hours. Fill pipe such that water velocity does not exceed one (1) foot per second.

2. Continuous Feed Method: Fill line with water, eliminate air pockets and flush water line at a minimum of 2.5 feet per second velocity to remove particulates. Feed chlorine water solution having a free chlorine concentration of 25 mg/l into line until entire line is filled with heavily chlorinated water. Retain chlorinated water in line for 24 hours after which time the free chlorine residual shall not be less than 10 mg/l.

3. Slug Method - Place calcium hypochlorite granules in the line during construction, completely fill the line to eliminate all air pockets, flush the line to remove particulates

and slowly flow a slug of water dosed with chlorine to a concentration of 100 mg/l through the line such that all parts of the line and appurtenances will be exposed to no less than 50 mg/l of free chlorine for not less than 3 hours.

B. Chlorination of Appurtenances: Operate valves and hydrants several times while exposed to the required chlorine concentration to assure disinfection of appurtenances and pipe branches.

C. Final Flushing: In order to prevent damage to pipe and linings, flush heavily chlorinated water from system until chlorine measurements show that the concentration in the water leaving the main is no higher than that generally prevailing in the distribution system.

D. Bacteriological Test: After final flushing, collect samples and test for presence of coliform organisms. A minimum of one sample shall be collected from each 1,000 feet of water line or at the next available sampling point beyond 1,000 feet as designated by the ENGINEER. Samples shall be collected in the presence of a representative of the ENGINEER.

3.03 REPAIRS/RESTORATION

A. If initial disinfection fails to produce tests showing absence of coliform organisms, the new line may be reflushed and shall be resampled. If check samples also fail to produce acceptable results, the main shall be rechlorinated until satisfactory results are obtained.

3.04 FIELD QUALITY CONTROL

A. Testing for bacteriological quality shall be in accordance with Standard Methods for the Examination of Water and Wastewater.

END OF SECTION 02675

This area was intentionally left blank.

SECTION 02677

HYDROSTATIC TESTING OF WATER LINES

PART 1 GENERAL

1.01 SUMMARY

A. This section covers the procedures for hydrostatic pressure testing of all new water lines and appurtenances.

1.02 RELATED SECTIONS

A. Section 02660 - Water Supply Lines and Piping

1.03 MEASUREMENT AND PAYMENT

A. There will be no separate payment for hydrostatic testing of water lines.

1.04 REFERENCES

A. The applicable provisions of the following standards shall apply as if written here in their entirety:

1. AWWA - American Water Works Association

1.05 SYSTEM DESCRIPTION

A. Furnish pump, pipe connections, gauges, meters, appurtenances and labor as required to perform pressure test and measure leakage on completed water line segments.

1.06 SCHEDULING

A. Perform hydrostatic pressure test on newly laid pipe or any valved section of piping after complete installation of pipe and all appurtenances, but prior to final sterilization or connecting to water system.

PART 2 PRODUCTS (Not Used.)

PART 3 EXECUTION

3.01 PREPARATION

A. Notify the ENGINEER prior to testing and allow the OWNER's representative to observe testing. After new water line has been laid and backfilled, but prior to replacement of pavement, fill each valved section of pipe slowly with water. Before commencing test, expel all air from line. If necessary, tap pipe at points of highest elevation to expel all air. On completion of tests, taps to be tightly plugged with brass fittings.

3.02 ERECTION/INSTALLATION/APPLICATION AND/OR CONSTRUCTION

A. Apply specified test pressure by means of pump connected to pipe. Provide means to measure or meter water pumped into the line to the nearest 0.1 gallon and a pressure gauge with a 6" minimum face and calibration marks at 1 psi intervals. At intervals during test, inspect route of pipe to locate any leaks or breaks.

3.03 REPAIR/RESTORATION

A. Remove and replace defective joints, cracks or defective pipe or fittings. Should any test of sections of pipe disclose leakage greater than that specified, locate and repair defective joints or defective pipe until test proves that leakage is within specified allowance.

3.04 FIELD QUALITY CONTROL

A. Hydrostatic Pressure:

1. PVC: The test pressure shall be at the rated pressure of the pipe measured at the lowest point in elevation in the section of pipe being tested.
2. DIP: The test pressure shall be at 1.5 times the working pressure at the point of testing. Contact Engineer for determination of working pressure at point of testing.

B. Pressure Allowance: The test pressure shall not vary ±5 pounds per square inch for the

duration of the test.

C. Test Duration: The test shall be two (2) hours.

D. Allowable Leakage: The maximum allowable leakage for a test section shall not exceed the amount determined from the following formula:

$$L=[(N \times D \times (P)^{1/2}]/7,400$$

Where:

L = Allowable Leakage (gallons per hour)
N = Number of Joints in the length of pipe tested (pipe and fittings)
D = Nominal Diameter of the Pipe (inches)
P = Average Test Pressure (pounds per square inch)

3.05 Leakage loss shall be withing the allowances specified before acceptance of the project.

END OF SECTION 02677

This area was intentionally left blank.

SECTION 02930

SEEDING AND MULCHING

PART 1 GENERAL

1.01 SUMMARY

A. This specification covers the seeding (including fertilizer) and mulching of areas that are disturbed during construction and those areas indicated in the Construction Drawings.

1.02 RELATED SECTIONS

A. Section 02110 - Clearing

B. Section 02210 - Grading

1.03 MEASUREMENT AND PAYMENT

A. Seeding will be paid for at the unit price or lump sum price stated in the bid form. The price shall include the furnishing of all necessary materials, preparation of soil, planting, raking, watering, sprinkling, and for all labor, tools equipment, and incidentals necessary to complete the work. The placement of fertilizer and/or mulch shall be considered incidental items under this section.

1.04 REFERENCES

A. The applicable provisions of the following standards shall apply as if written here in their entirety:

1. TxDOT - Texas Department of Transportation Standard Specifications for Construction of Highways, Streets and Bridges
2. U.S. Department of Agriculture - Rules and Regulations Under the Federal Seed Act and the Texas Seed Law.

1.05 SUBMITTALS

A. Submit label from seed that will be used in the project. All labels must show the name and type of seed, purity and germination data.

1.06 DELIVERY, STORAGE, AND HANDLING

A. Seed, fertilizer and mulch shall be delivered, stored and handled in such a manner that the material shall not be damaged by water. Any seed, fertilizer or mulch that is wet, moldy, or otherwise damaged will not be acceptable.

PART 2 PRODUCTS

2.01 MATERIALS AND/OR EQUIPMENT

A. Seed: The type and amount of seed to be placed shall be in accordance with the following table:

Time of Year	Type of Seeds	Amount to be Placed per Acre
January 1 to April 1	Bermuda Grass - Unhulled Bermuda Grass - Hulled	15 lbs. 15 lbs.
April 1 to October 1	Bermuda Grass - Hulled	20 lbs.
October 1 to January 1	Bermuda Grass - Unhulled Rye Grass (Italian)	12 lbs. 20 lbs.

B. Fertilizer: Fertilizer shall be 13-13-13, or approved equal. The fertilizer shall be applied at a rate of 500 lbs per acre.

C. Mulch:

1. Hay Mulch: Hay mulch shall be prairie grass, Bermuda grass or other hay approved by the ENGINEER. The hay mulch shall be free of Johnson grass or other noxious weeds and foreign materials. It shall be kept in a dry condition and shall not be molded or rotted.
2. Fiber Mulch: Fiber mulch shall be a natural cellulose fiber mulch produced from grinding clean, whole wood chips or fiber produced from ground newsprint with a labeled ash content not to exceed 7%.

PART 3 EXECUTION

3.01 ERECTION/INSTALLATION/APPLICATION AND/OR CONSTRUCTION

A. Preparation of Seed Bed: After the designated areas have been rough graded to the lines, grades, and typical section indicated or as provided for in other items of this Contract and any other soil area disturbed by construction, a suitable seed bed shall be prepared. The seed bed shall consist of either 4 inches of approved topsoil that is cultivated and rolled sufficiently to a state which could prevent from being covered too deep for optimum germination. The optimum depth for seeding shall be 1/4 inch. Water shall be applied as required to prepare the seed bed.

B. Seeding Method: The seed or seed mixture shall be applied by drill method or hydro method. Both methods shall be approved by the ENGINEER prior to the placement of any seed and fertilizer. All methods shall distribute the seed mixture at a uniform rate. After placement of the seed mixture, the area shall be lightly raked to ensure that the seed is at the optimum depth.

C. Watering: All areas that are seeded shall be kept moist for a period of ten days. Watering applications shall constantly maintain the seed bed in a wet condition favorable for the growth of grass. Watering can be postponed immediately on the site after a rainfall of ½ inch or greater, but shall be resumed before the soil dries out. Watering shall continue until the grass is uniformly 1-½ inches in height and acceptable to the OWNER.

D. Mulching:

1. Hay Mulch: Hay mulch shall be spread uniformly over the areas indicated at a rate of 2 to 2-½ tons of hay per acre. The mulch may be hand or machine placed and shall be adequately secured by crimping.
2. Fiber Mulch: Fiber mulch shall be spread uniformly over the areas indicated at a rate of 3,000 lbs/acre. When applied, the mulch shall form a strong, moisture-retaining mat without the need of an asphalt binder.

3.02 REPAIR/RESTORATION

A. Seeding will be considered complete when the seeding is complete in place, with a minimum of 95 percent coverage with no bare areas exceeding 16 square feet and a 1-½ " stand of grass. Bare area shall be repaired and reseeded as required to develop an acceptable stand of grass at no cost to the OWNER.

END OF SECTION 02930